DECEMBER 1977

# HEWLETT-PACKARD JOURNAL

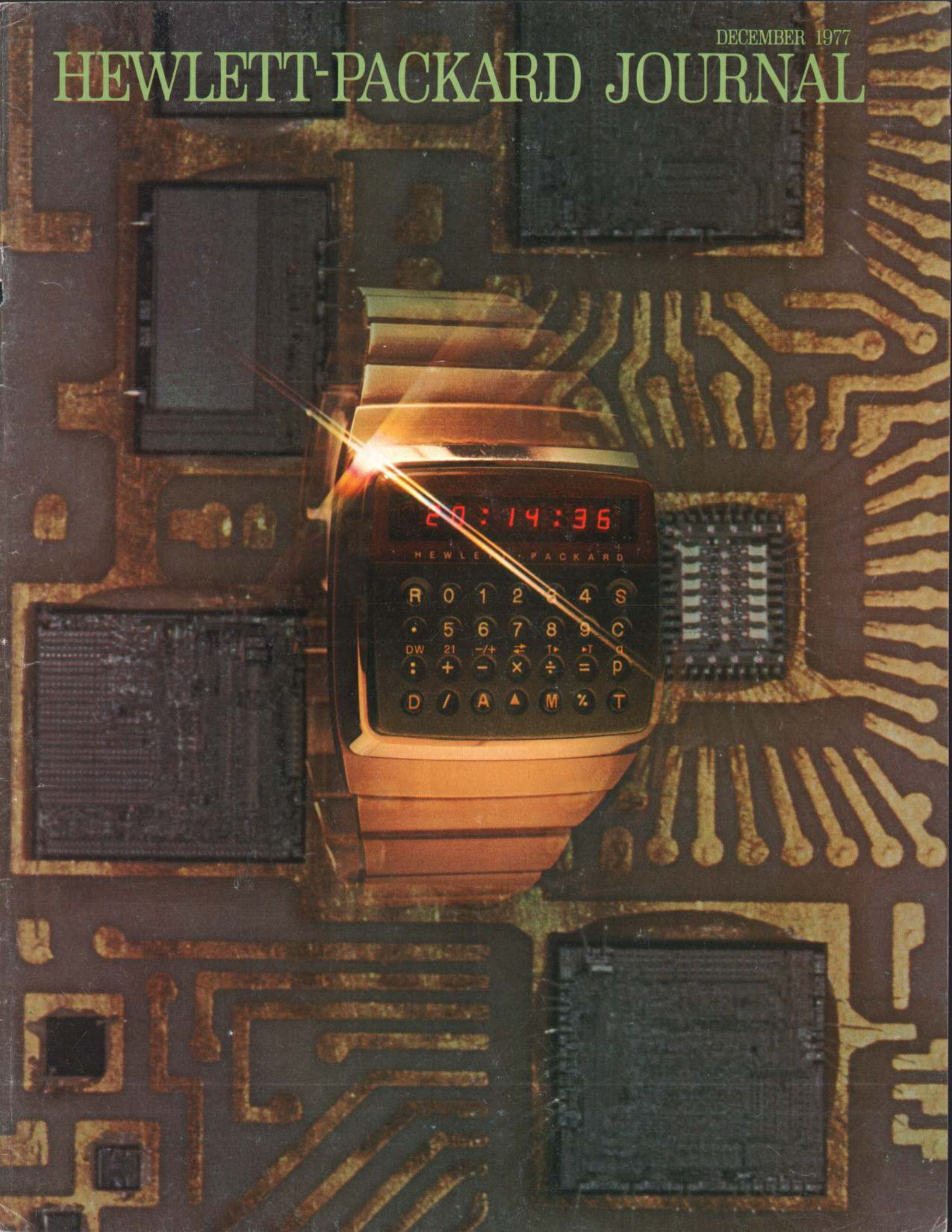

# Wrist Instrument Opens New Dimension in Personal Information

*It's a digital electronic wristwatch, a personal calculator, an alarm clock, a stopwatch, a timer, and a 200-year calendar, and its functions can interact to produce previously unavailable results.*

**by André F. Marion, Edward A. Heinsen, Robert Chin, and Bennie E. Helmso**

THE CONCEPT OF A COMBINED wristwatch and calculator is a natural outgrowth of today's digital watch and pocket calculator technologies. However, merely putting these two functions into one small case does not add significantly to the capabilities already available to the consumer. Only when the time and computation functions are allowed to interact freely can the full potential of the combination be realized and significant new capabilities be made available.

It is this interaction, along with state-of-the-art watch and calculator technologies, that provide the wearer of the HP-01 Wrist Instrument with information that was previously unavailable, and makes the HP-01, after a brief experience with it, more difficult to do without than it might at first appear.

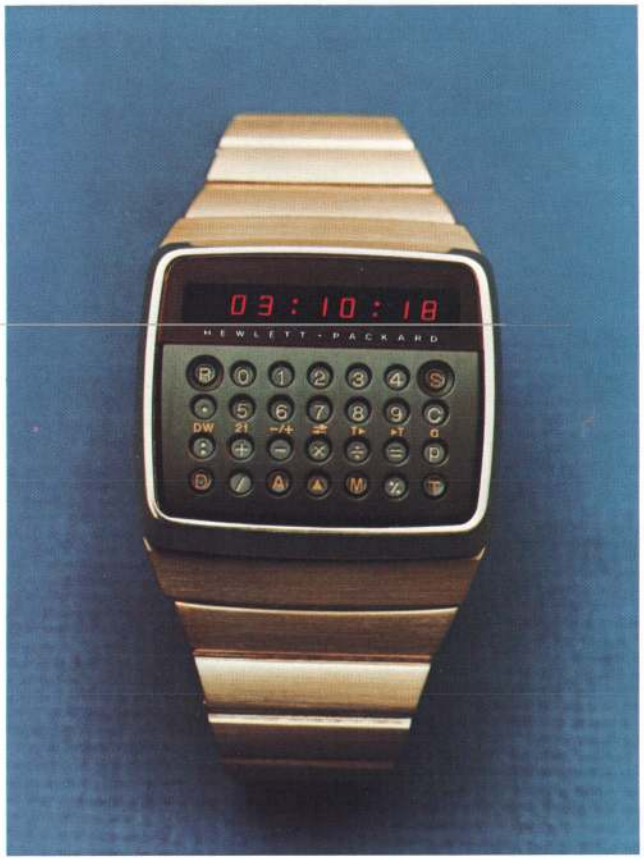


The six-ounce HP-01 is the first of a new generation of wrist instruments. It has six interactive functions: time, alarm, timer/stopwatch, date/calendar, calculator, and memory. It has 28 keys, six finger-operated and 22 operated by a stylus fitted in the watchband clasp, and twelve display modes or indicators. The HP-01 also comes with a pen that has a special stylus tip for operating the keyboard.

The HP-01's features are made possible by an advanced low-power microprocessor that contains the equivalent of about 38,000 transistors. Extremely low-power circuits had to be developed to achieve a power consumption four orders of magnitude smaller than that of the HP-35,[1] Hewlett-Packard's first pocket calculator. The HP-01's average power dissipation is 20 microwatts with the display off and 36 milliwatts with the display on. Another formidable design challenge was the packaging of six integrated circuits, the display, keys, and buzzer in a volume of about 16 $cm^3$(1 $in^3$).

### Data Entry

The HP-01 permits keyboard entry of four intrinsically different kinds of data: decimal, time of day, time interval, and date. This is accomplished with three keys: the decimal point (.), the colon (:), and the slash (/)

Decimal numbers are entered in much the same way as on any calculator. Up to seven digits plus decimal point and sign may be entered. A number is assumed to be decimal even though the decimal point has not been explicitly entered unless and until a colon or slash is entered in the display. The HP-01 is not a scientific calculator, so there is no enter-exponent key. The range of decimal numbers that can be entered from the keyboard is .0000001 to 9999999., but display of results covers a greater range (this will be described shortly). Entry of leading zeros or multi-



© Hewlett-Packard Company, 1977

ple decimal points is ignored. When the display is full, further entries are ignored.

The colon is used to enter time interval data. The range of time entry is .01 seconds (00:00.01) to 99999 hours, 59 minutes (99999:59). Because of the limited length of the display, this is split into three ranges. If more than five digits are entered first, the number is clearly out of range for time entry and therefore is assumed to be decimal; the colon key is ignored. If from three to five digits are entered and the colon key is pressed, the display format is HHHHH:MM where H stands for hours digits and M stands for minutes digits. Leading zeros are blanked. If the colon is the first key pressed, or if one or two digits are entered before the colon key is pressed, the display may be either HH:MM:SS (where S stands for seconds digits) or MM:SS.CC (where C stands for hundredths of seconds digits). In these two ranges all leading zeros are displayed. After the colon, the next field is entered and then either the colon or the decimal point is pressed. If the colon is pressed, the first two fields are assumed to be HH:MM; if the decimal point is pressed, they are MM:SS. If the entry is terminated before pressing the second colon or decimal point, the colon (HH:MM:SS) is assumed.

Digit entry in fields after a colon is slightly different from the normal sequential entry of a decimal number. Digits (including the first digit) are entered in the right side of the two-digit field. As other digits take their place, they shift to the left and then disappear. In this way only the last two digits pressed after a colon are significant; for example, the same results will be obtained with the key sequence: 5 2 6 3 9 4 2 as with the sequence: 4 2. This permits easy error correction without clearing and re-entering the whole number. After pressing the decimal point in the MM:SS.CC range, normal sequential entry resumes. In this range, when the display is full, further entries are ignored: in the other two ranges, even though the display is full, entry can continue in the last field as described above. After the entry is terminated, the minutes and seconds digits must be less than 60, otherwise the display flashes, indicating an error. Fields in which no entry is made are assumed to be zero.

The HP-01 allows entry of dates with the slash key. If more than two digits are entered before pressing the slash, the number is obviously out of range and must be either a time or decimal entry, so the slash is ignored. If two or fewer digits are entered and the slash is pressed, the digits are assumed to be the number of the month and the slash is entered in the display (the slash appears as a dash in the display). Then the day is entered, the slash is pressed again, and the year is entered. Digits in the day and year fields enter the display like digits after the colon as described above, so that only the last two are significant. A single leading zero is blanked if present. If no digits are entered in any given field, it is assumed to be zero (note that this is an error in the month and day fields). When the entry is terminated, if the month or day fields are zero, or if the month field is greater than 12, or if the day field is greater than 31, the display flashes, indicating an error. If the day is greater than the number of days in the month (but not greater than 31), the date is automatically adjusted. For example, when terminated, 2-30-75 will become 3-2-75.

Obviously erroneous entries, such as colons or slashes after a decimal point, colons after a slash, slashes after a colon, and so on, are ignored.

To enter negative decimal numbers and negative time intervals, the change sign function is used. This function is accessed by pressing the prefix key (Δ) and the subtract key (−). If the display shows time of day or date data, change sign is ignored.

#### Display

To conserve battery power the display automatically turns off after a fixed period of time. Because only a quick glance is necessary to see the time, the watch register is displayed for two to three seconds only. Any other display except the stopwatch remains visible for six to seven seconds. When displaying the stopwatch, the display remains on. The R key will turn the display on at any time.

The display has nine full digit positions so that a fixed-point decimal number with seven digits, a decimal point, and possibly a leading minus sign can be

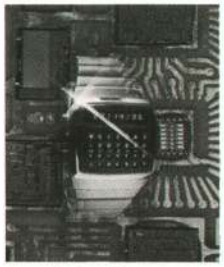

**Cover:** *The multifaceted HP-01 Wrist Instrument, the first of a new generation of personal time and computation products. Shown here is the gold-filled case; stainless steel is also available.*

**In this Issue:**

*Wrist Instrument Opens New Dimension in Personal Information, by André F. Marion, Edward A. Heinsen, Robert Chin, and Bennie E. Helmso* ..... **page 2**

*Higher Precision in Oscilloscope Measurements of Very Short Time Intervals, by Ronald C. Westlund* ... **page 11**

*A Wide-Ranging, Automatic LCR Meter for Stand-Alone or Systems Applications, by Masahiro Yokokawa and Keiki Kanafuji* ..... **page 18**

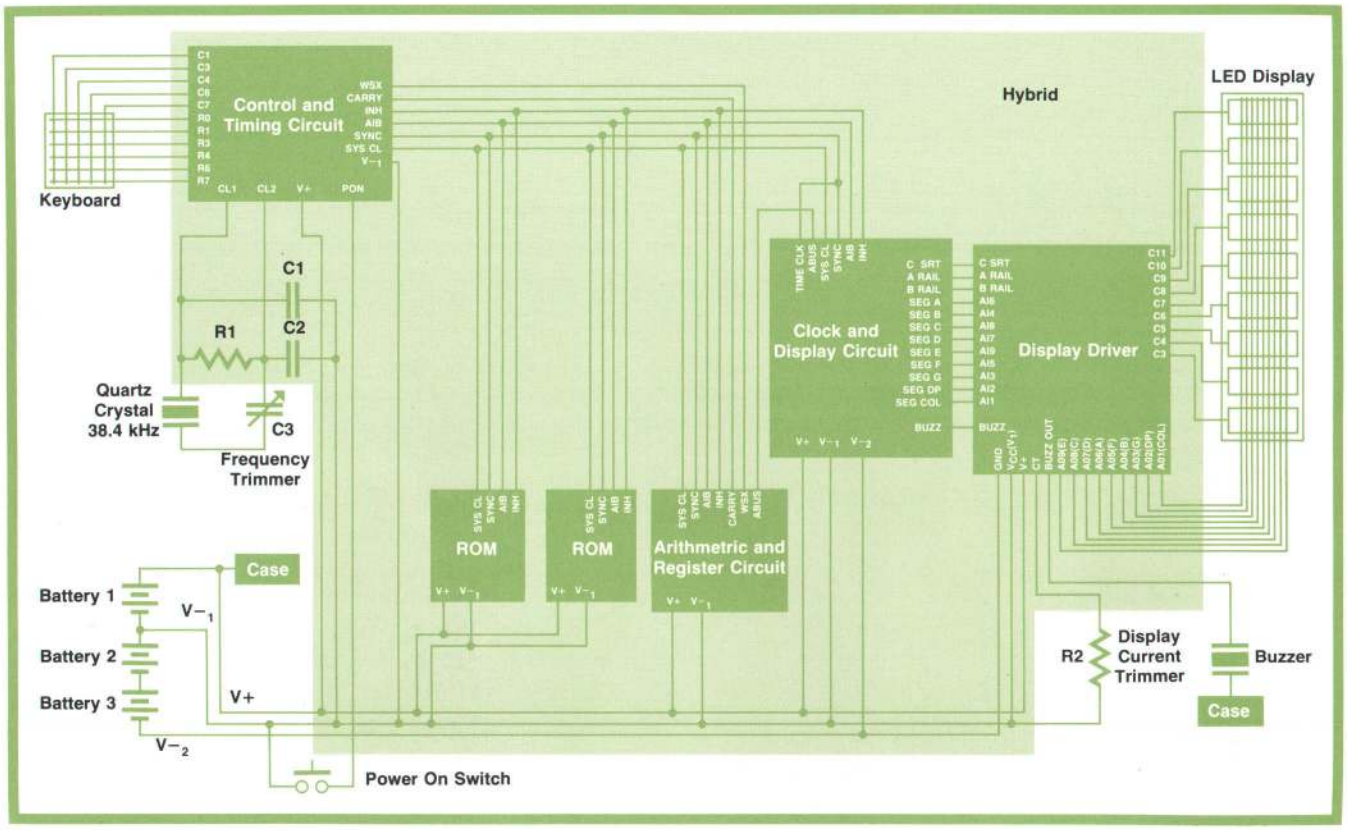


**Fig. 1.** *Block diagram of the HP-01. The two read-only memories (ROMs), the arithmetic and register circuit, the clock and display circuit, and the control and timing circuit are all complementary metal-oxide-semiconductor (CMOS) integrated circuits. The display driver is a bipolar integrated circuit.*

displayed. If a result is greater than or equal to $10^7$ or less than $10^{-4}$, the display automatically shifts to scientific notation. In scientific notation, the display accommodates four mantissa digits, decimal point, and sign, and two exponent digits and exponent sign. This makes it possible to present results from $10^{-99}$ to $9.999 \times 10^{99}$.

Time-of-day data is created when time interval data is stored into the watch or alarm register, or when the AM/PM function is used. Time of day is displayed in a slightly different way from the HH:MM:SS time interval format. First, all the digits are shifted left one position (there is no negative time of day, so there is no need for the leading minus sign), and the second colon is blanked. A blank in the last digit indicates AM, a decimal point indicates PM. Thus, eleven PM is displayed 11:00 00., while eleven AM does not have the trailing decimal point.

The HP-01 can display the time of day in either twelve-hour or twenty-four-hour mode. The display for twenty-four-hour mode is the same as for twelve-hour mode except that the last digit is always blank because there is no need for a PM indicator. When the power is turned on (only when the processor battery is replaced), the HP-01 wakes up in twelve-hour mode. The calculator can be changed from one mode to the other by pressing the prefix key (Δ) and the decimal point key (.). To prevent inadvertent change, this sequence is ignored unless time-of-day data is being displayed.

In twelve hour time-of-day mode, PM times of day are entered using the PM key (p). When the display contains a time interval, pressing the p key changes the format to a time-of-day format and the PM indication (decimal point in the last digit position) is added. The key sequence Δ p changes a PM time of day into an AM time by eliminating the decimal point.

The display format for dates is MM-DD-YY where M stands for the month digits, D stands for the day digits, and Y stands for the last two digits of the year. This is fine for twentieth century dates, but the HP-01 can handle dates from January 1, 1900 to December 31, 2099. Twenty-first century dates are displayed like twentieth century dates except that a decimal point in the last position serves as a twenty-first century indicator. Thus, October 18, 1975 is displayed 10-18-75, while 10-18-75. represents October 18, 2075.

Most people in the U.S.A. prefer the month, day, year date mode. This is by no means universal, however, so the HP-01 also provides the day, month, year mode. In either mode, the other mode may be selected by pressing the prefix key (Δ) and the decimal point key (.). Once again, to prevent accidental change, this

sequence is ignored unless date data is being displayed.

To enter dates in the twenty-first century, the sequence Δ + is used. A twenty-first century date is keyed in exactly as a twentieth-century date, and then Δ + is pressed.

### An Algebraic Calculator

The HP-01 is a calculator that has some new features and functions, including a watch function, an alarm, a calendar and date, and a stopwatch and timer. The HP-01 is the first portable Hewlett-Packard calculator to be implemented as an algebraic machine.

In an algebraic calculator, key sequences proceed much as one would write the problem on paper. The first operand is entered, this entry is terminated by pressing one of the four operator keys (+, −, ×, ÷), the second operand is then entered, and the calculation is performed and displayed by pressing the equals key. Special features found on many four-function calculators, including automatic squaring and doubling and automatic constant, are also features of the HP-01.

A summary of HP-01 operation is as follows (X, Y, and F are internal registers; the X register is shown in the display):

When an operator key is pressed,

- If the previous entry is a keyed-in number, it is terminated.
- If the previous entry was the second operand, it is stored in the Y register and an automatic equals operation is performed (see below).
- If the previous entry was the first operand, it is stored in the X register.
- The operator (+, −, ×, ÷) is stored in the F register.
- The data in the X register is copied into the Y register.
- The following entry (if there is one) will be the second operand and will overwrite the Y register.

When the equals key is pressed,

- The arithmetic operation X(F)Y is performed and the result placed in the X register.
- The operator (F register) and the second operand (Y register) are left undisturbed.
- The following entry (if there is one) will be the first operand and will go into the X register.

Since all four types of data can be used in arithmetic calculations, some rules have been established that define the data type of a result, given the types of the operands. These rules are summarized in the following table. D stands for date data, t stands for time interval data, T stands for time-of-day data, d stands for decimal data, and E stands for error. For example, when a time of day (T) is added to a time interval (t), the result is a time of day (T). The entries for this example are shown in color in the table.

First Operand →

Second Operand ↓

| + | d | t | T | D |
|---|---|---|---|---|
| d | d | t | T | D |
| t | t | t | T | E |
| T | T | T | E | E |
| D | D | E | E | E |

| − | d | t | T | D |
|---|---|---|---|---|
| d | d | t | T | D |
| t | t | t | T | E |
| T | T | T | t | E |
| D | E | E | E | d |

| × | d | t | T | D |
|---|---|---|---|---|
| d | d | d | E | E |
| t | d | d | E | E |
| T | E | E | E | E |
| D | E | E | E | E |

| ÷ | d | t | T | D |
|---|---|---|---|---|
| d | d | d | E | E |
| t | d | d | E | E |
| T | E | E | E | E |
| D | E | E | E | E |

An error is indicated by a flashing display. A decimal number used in time computations is assumed to be a decimal number of hours; in date computations, it is a decimal number of days.

If an operation causes date overflow or underflow, the largest date (12-31-99.) or the smallest date (1-01-00) is displayed and the display flashes.

### The Watch Function

The HP-01 also has a peripheral register, the watch register. Once it is set properly, it always contains the current time of day. One can recall and view the time of day at any time by pressing the time (T) key. The HP-01 continuously updates the display as the seconds tick off.

To set the HP-01 to the correct time, the user enters the proper time into the display (from 1:00:00 to 12:59:59 in 12-hour mode, or from 0:00:00 to 23:59:59 in 24-hour mode), enters AM or PM in 12-hour mode, and presses the prefix key (Δ) and the time key (T). When the time key is pressed, the time is loaded into the watch register and the seconds begin to increment.

Travelers often change time zones. A special key sequence corrects the HP-01 display without reset-

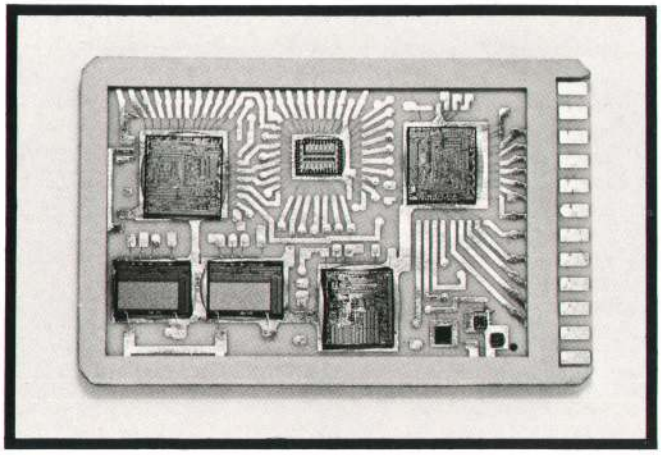

**Fig. 2.** *All of the integrated circuits and three discrete components for the oscillator are combined in a hybrid circuit on a five-layer ceramic substrate.*

ting the watch. The sequence is as follows:

T + (entry) Δ T or T − (entry) Δ T.

The entry is typically a time interval, but a decimal number of hours may be used (e.g., T + 3 Δ T). When the final T key is pressed, the given operation is performed and the result, modulo 24 hours, is loaded into the watch register and displayed. If the result causes an increment or decrement past midnight, the date register is automatically adjusted. For example, if T + 48 Δ T is keyed in, the time remains the same, but the date register contains the date two days from now.

The current time of day may be used as an operand in many arithmetic operations. It is important to remember that the time of day used in the operation is the actual time of day when the = key is pressed, that is, when the operation is actually performed, not the time of day when the = key is pressed. In other words, the sequence T + 3 = gives a different answer from the sequence T + 3 (10 minute wait) = . The same is true if the stopwatch register is running and is used in a calculation. The value used is the value when the operation is actually performed.

### The Date Function

Another special HP-01 register is used to keep the current date. To recall the date, the user simply presses the date (D) key. To set the date, the user enters the date and presses Δ D. The date register works in conjunction with the watch register; each time the watch register increments past midnight, the date is incremented. The HP-01 has a built-in 200-year calendar (January 1, 1900 to December 31, 2099) that takes care of leap years and different lengths of months automatically, so the only time the date needs to be reset is when the processor battery is changed.

### The Alarm Function

The alarm register contains a fixed time of day. When the alarm is armed, this time of day is constantly compared to the value in the watch register. If the two become equal, the buzzer sounds. To recall and view the time of day in the alarm register, the user simply presses the alarm key (A).

The trailing digit position in the display contains a dash to indicate that the alarm is set. When the alarm is triggered and the buzzer sounds, the alarm is disabled and the dash disappears. To set the alarm, the user enters the desired time, then presses Δ A. To change from one alarm state to the other, the user first displays the alarm by pressing A, then presses Δ A. The alarm cannot be set for a specific date; it triggers the first time a match occurs.

It is sometimes desirable to use the alarm as a timer. To do this the key sequence is:

T + (entry) Δ A

To set the alarm to go off ten minutes from now, one would perform the sequence T + :10 Δ A. The ten-minute interval begins at the moment the A key is pressed. The sequence T − (entry) Δ A can also be used, but is probably not useful. This sequence is identical to that for the watch offset, but the result is loaded into the alarm register only and the date is not affected.

### The Stopwatch and Timer

A special register serves both a stopwatch and a timer function. To display the contents of the stopwatch, one presses the stopwatch or interval key (S). Since this register may be continually changing, the display is constantly updated. To load the stopwatch, the user enters the desired time interval (less than 100 hours) and presses Δ S. Attempting to load date or decimal data other than zero into the stopwatch causes an error indication. If the stopwatch holds a number less than one hour, the display is MM:SS.CC; if the stopwatch contents are greater than or equal to one hour, the format is HH:MM:SS.

When displaying the stopwatch, pressing the stopwatch button again will start it running. If the stopwatch is displayed and running, pressing the stopwatch key again will stop it. Pressing S when the stopwatch is not being displayed simply recalls it, without modifying the run/stop state of the register.

If the stopwatch is initially loaded with zero and then started, it increments every hundredth of a second, functioning as a stopwatch. If loaded with some non-zero time interval and then started, the stopwatch counts down. When it reaches zero, the buzzer sounds and the stopwatch immediately begins to increment from zero. This is the timer mode. The stopwatch counts modulo 24 hours when incrementing. When decrementing, it can be set to any time interval less than 100 hours and it will count down to zero.

The R key stops a running display without affecting the stopwatch, making it possible to read an intermediate time. The same key resets the stopwatch to zero if it is not running.

### Dynamic Calculations

An important feature of the HP-01 is its ability to perform continuously updated calculations while the timer or stopwatch is running. When the stopwatch is being displayed, the key sequence S × (hourly rate) = or S ÷ (unit rate) = causes the calculator to perform the indicated calculation and update the display once each second. For example, accumulating charges for a telephone call costing $1.00 per minute ($60 per hour) can be displayed by pressing S × 60 = . The first keystroke starts the stopwatch and the remaining keystrokes cause the cost of the call to be computed and updated each second.

To end a dynamic calculation, the S key is held down for a full second to return to the stopwatch

display. Pressing S again stops the timer/stopwatch. Pressing = then displays the calculated result.

### The Memory Register

All of the registers that have been described are special-purpose registers. Some are constantly changing and all contain only a certain type of data. The HP-01 also has a general-purpose memory register that can be used to store any type of data. Pressing the memory key (M) recalls the contents of this register. The key sequence Δ M stores whatever is in the display into the memory register. The sequence Δ M will also perform a pending operation before storing the display. For example, 7 + 3 Δ M stores the value 10 in the memory register. When the value in the watch register or stopwatch register is stored into the memory, it is converted to fixed time of day or fixed time interval data at the instant the M key is pressed. This does not disturb the normal operation of the watch or stopwatch. This feature is especially useful for storing a "split."

### Other Functions

The calendar function provides the month, day, and year, but it is often desirable to know the day of the week also. A function has been implemented to provide this information. With any date in the display, pressing the prefix key (Δ) and the colon key (:) converts the date to a decimal number from one through seven, indicating the day of the week (Monday is one, Tuesday is two, and so on). Attempting to perform this function on time or decimal data will cause an error indication.

Sometimes it is also useful to know the number of the day of the year. With a date in the display, this function is accessed by pressing the prefix key (Δ) and the slash key(/). The date is converted to a decimal number from one to 366 corresponding to the day of the year.

In computations involving time it is often necessary to convert from hours, minutes, and seconds to a decimal number of hours. This is done by the key sequence Δ ÷ .

To convert a decimal number (assumed to be in hours) to hours, minutes, and seconds, the key sequence is Δ = . The number is converted to time interval format and displayed in the proper range. This function can be used to freeze the time of day or stopwatch in the display only, without using the memory register. Performing this function on date data will cause an error indication.

Once in a while when evaluating an expression it is more convenient to compute the value of the second operand in a subtraction or division before the first operand. To make it unnecessary to use the M register or write down this intermediate result an exchange function has been implemented. This function switches the first and second operands in the calculator. It is called by pressing Δ ×. For example, if one wishes to subtract two from three, but the entry has progressed 2 − 3, one only has to press Δ × to reverse the operands, and then press = to complete the operation. This feature is also useful for viewing the second operand, which otherwise could not be directly displayed.

### System Organization

The HP-01 contains five CMOS/LSI* circuits: two read-only memories (ROMs), an arithmetic and register circuit, a control and timing circuit, and a clock and display circuit. One custom bipolar circuit drives the light-emitting diode anodes and cathodes. Fig. 1 is a block diagram of the HP-01.

How to interconnect the six integrated circuits and interface them to the other components was one of the primary challenges in the packaging of the HP-01. All of the integrated circuits and three discrete components for the oscillator are assembled on a five-layer ceramic substrate using conventional bonding techniques (see Fig. 2). This hybrid assembly is

*Complementary metal-oxide-semiconductor large-scale integrated circuits.

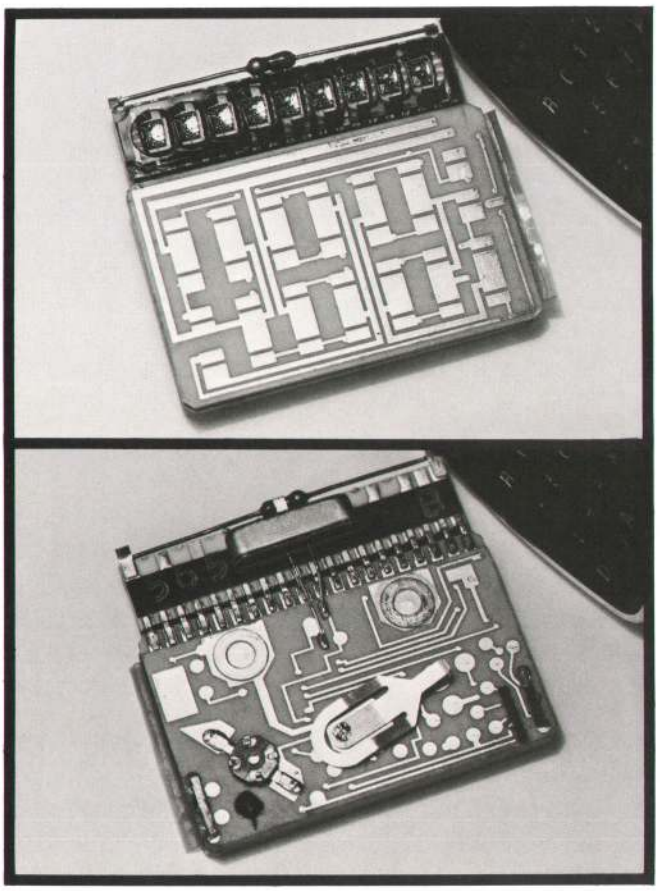

**Fig. 3.** *The ceramic substrate containing the integrated circuits is capped, and the display, crystal resonator, and frequency trimmer are added to complete the HP-01 module.*

capped, and after aging at 125°C for 48 hours the assemblies are functionally tested. Then the display, crystal resonator, frequency trimmer, keyboard insulator, and battery contacts are added to complete the HP-01 module (see Fig. 3). Each module is then given a complete electrical test on a computer-based system.

The HP-01 is organized on a digit-serial, bit-serial basis. This organization is very similar to that of the HP-35.[1] It minimizes the number of connections on each chip and between chips.

Each word consists of 12 binary-coded-decimal digits, so each word is 48 bits long. Four main bus lines connect the MOS circuits. One carries a word synchronization signal (SYNC) generated by a 48-state counter on the control and timing chip. On another bidirectional bus line (AIB), addresses and instructions are transmitted between the control and timing chip and the ROMs and instructions are transmitted from the ROMs to the other circuits. A word-select line (WSX) carries a signal generated on the control and timing chip that makes it possible to perform arithmetic operations on different parts of the data word.

#### Control and Timing Circuit

The control and timing circuit performs the major non-arithmetic or housekeeping functions in the HP-01. These include interrogating the keyboard, keeping track of the status of the system, creating timing and synchronization signals necessary for system operation, and modifying instruction addresses.

The control and timing circuit contains an on-board oscillator amplifier, 16 status bits and the keyboard scanner. The keyboard is arranged as a five-column, six-row matrix. When a key is pressed, a code corresponding to the row and column of the key is transmitted over the AIB line to the read-only-memory. This code is the starting address of a program in ROM to service that key.

The 16 status bits are used to keep track of past events. These status bits are set, reset, or interrogated by individual instructions, and can be used to check various conditions in the execution of programs stored in ROM.

ROM addresses are updated on the control and timing chip and sent serially to the ROM. During execution of a branch instruction the appropriate signal, arithmetic carry, or status bit, is tested to determine whether the incremented address or the branch address should be selected next. There are two return address registers and these permit two levels of subroutines.

A pointer register and a word-select circuit issue the word-select signal (WSX), which corresponds to the time slot being operated upon. It is possible to operate on just a single digit of a number as it flows through the arithmetic unit.

#### Read-Only Memory

Preprogrammed routines are stored in two ROM chips, each of which contains 1024 instructions of 10 bits each, organized in four pages of 256 instructions each. A ROM address consists of an eight-bit address and a four-bit page number. The page number tells which ROM chip the information is on and the address tells where it is on the chip.

#### Arithmetic and Register Circuit

The arithmetic and register circuit in the HP-01 is very similar to the HP 35's, except that the data word is only 48 bits long. Another difference is that the arithmetic and register circuit in the HP-01 can be put into a sleep mode to save power.

There are five full-length 48-bit registers and a four-bit register. Interconnection between registers allow for such instructions as exchange, transfer, shift, and so on. A two-way data bus connects the arithmetic and register circuit with the clock and display circuit.

#### Clock and Display Circuit

The clock and display circuit chip contains the circuitry and registers to implement a stopwatch, a 24-hour clock, a calendar, and an alarm. The display decoder and display timing circuits are also on this chip.

#### Construction

The particularly harsh environment in which a wrist-worn product operates dictated an extremely rugged enclosure for the delicate components of the HP-01. Shock and vibration, temperature and humidity changes, body chemicals, abrasive dust, and constant friction against clothing presented a challenge to the designers. Requirements for a small and visually pleasing product imposed additional difficulties rarely encountered at HP.

The size and shape of the hybrid module ruled out a round case, eliminating turning as a fabrication method. Alternate methods investigated included plastic molding, investment casting, powdered metal, NC machining, and forging. In the final design, blanks for the two-piece case are produced by cold-forging stainless steel. These are then turned, machined, and finished.

The two halves of the metal case are assembled by means of a threaded ring. A rubber gasket between the two parts seals moisture and solid particles out of the case. The upper side of the case, the bezel, is closed by the glass window and the keyboard panel. Both elements are permanently bonded to the metal case by an

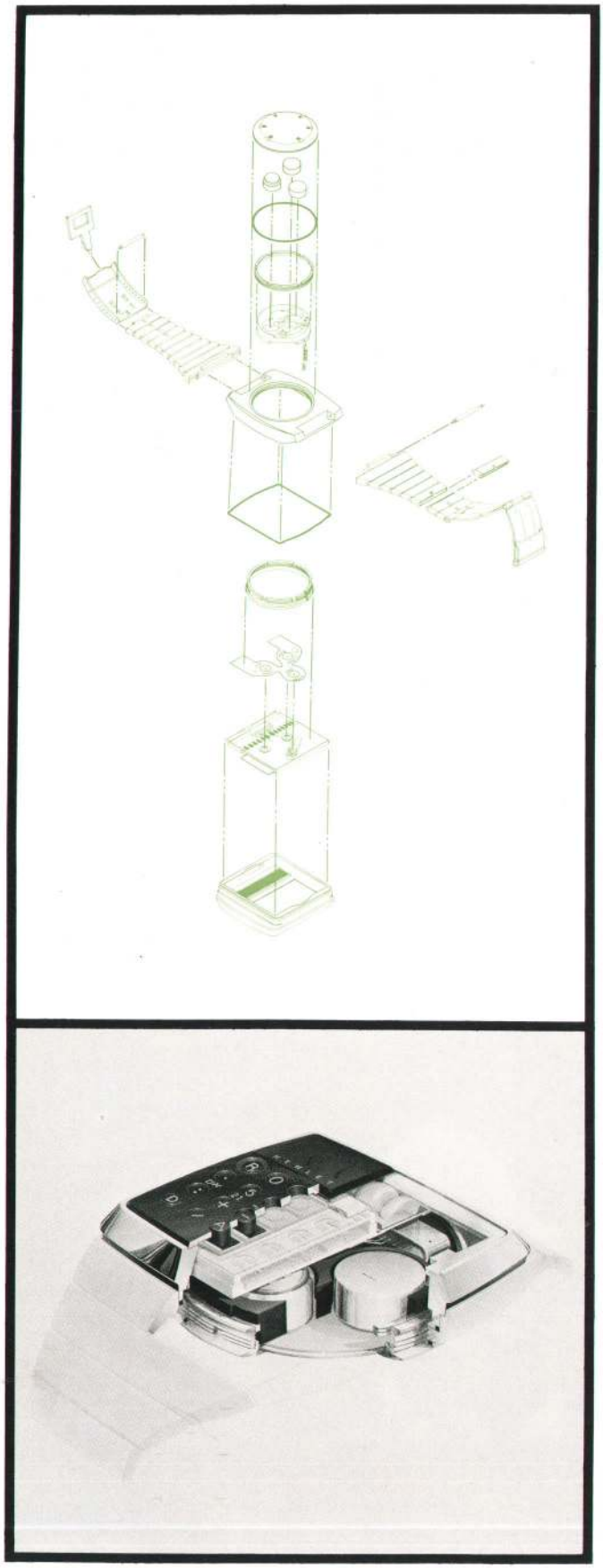

**Fig. 4.** *Exploded and cutaway views of the HP-01.*

epoxy adhesive. The 28 cylindrical keys are guided by holes in the panel and are maintained in both displacement and rotation by a silicone rubber diaphragm bonded onto the back of the panel with an RTV adhesive. In addition to its mechanical functions, the diaphragm also provides a seal for the front of the product.

The module assembly is placed in the bezel assembly before the bottom of the case is screwed on. A plastic spacer retains the module assembly and holds the batteries.

The bottom side of the case is closed by the back. The back is screwed into the case and is easily removed when batteries need to be changed. A circular rubber gasket between the back and the case seals the case against external contamination.

The band design, which was done by an outside vendor, was made challenging by the complex shape and the requirement that the clasp conceal a stylus for keyboard operation. The band links are interlocking stainless steel elements. The clasp separates to allow access to the back of the case.

Fig. 4 shows cutaway and exploded views of the HP-01.

**Acknowledgments**

The development of the HP-01 required significant contributions by many people in several HP Divisions. We would like to give special recognition to Ed Salter for his superb industrial design; Tom Holden, who developed the mechanical package; Bob Rehner, who developed the hybrid and module assemblies; Steve Harper for the programming; Mike Pan for the clock and display circuit design; Vijay Marathe and Bob Schweizer for the early architecture and logic design; Mike Cook and Lyman Alexander for circuit and module testing; Jaime Ash and Tim Williams for the crystal oscillator design; George Custer, Bob Low, Jim Guynn and Richard Jordan for their help in putting the product into production; John Lortscher and Bob Flint, who provided the production engineering support; Tom Peterson, Bob Savitsky and John Altendorf, who served as product manufacturing engineers; Don Grant, Norm Glaeser and the QA Group; the Manufacturing Division tool designers and builders whose state-of-the-art methods helped make the product possible; Cliff Planer and the many model makers whose invaluable skills allowed fabrication of prototypes. We also would like to extend our thanks to Ron Sutton, Mike Bosworth, Jerry Fisher, and Carmine Petretto for the marketing and graphics support; Robert Barkan for the service manual; John Uebbing and John Fisher of OED, who developed an attractive display; Andy Scriven and Mike Torain from Santa Clara Division, who processed and tested the display

driver; and finally to the many people who early in the design helped define the HP-01.

## Reference

1. T.M. Whitney, F. Rode, and C.C. Tung, "The 'Powerful Pocketful:' an Electronic Calculator Challenges the Slide Rule," Hewlett-Packard Journal, June 1972.

### HP-01 Operating Characteristics and Specifications

**CIRCUITRY:** The HP-01 uses six large-scale integrated circuits equivalent to 38,000 transistors. The nine-digit display is bonded to a five-layer ceramic module which contains the circuits.

**POWER SOURCE:** Two 1.5-volt watch cell batteries power the display. A third 1.5-volt battery powers the internal circuitry.

**WEIGHT:** Approximately 170 grams (6 ounces).

**MATERIALS:** HP-01 cases are either stamped from stainless steel or gold-filled. The keys and key panel are stamped from aluminum and hard anodized so that they resist scratching and wear. The custom-design band is forged from a solid steel bar to form connecting links that fit smoothly around the wrist. On gold-filled cases, the matching band is gold electroplated.

**TIME STANDARD:** Quartz-crystal.

**TIME ACCURACY:** The HP-01 time function was set at the factory to an initial accuracy of within 30 seconds per year. Because of the effects of temperature variations, aging, shocks, and vibrations on its quartz-crystal time standard, the HP-01 time accuracy may vary.

**TIMER/STOPWATCH ACCURACY:** The timer/stopwatch operating accuracy is also affected by environmental changes and is within ±0.003%.

**STOPWATCH RESOLUTION:** ±0.01 second.

**OPERATING TEMPERATURE:** 0° to 55°C (32° to 131°F). When worn on the wrist, the HP-01 battery operating temperature will remain relatively close to body temperature even though the ambient temperature may be far below freezing.

**STORAGE TEMPERATURE:** Without batteries: −40° to 75° C (−40° to 167° F). With batteries: −40° to 55° C (−40° to 131° F).

**ANTI-MAGNETIC:** The HP-01 will operate in a magnetic field of up to 60 gauss without adverse effect.

**SHOCK RESISTANCE:** The HP-01 has been designed and tested to withstand shocks beyond those encountered in normal use with only minor changes in accuracy. Excessive or cumulative shocks may be cause for recalibration.

**WATER PROTECTION:** Although the HP-01 is not intended for underwater use, it has been designed and tested to withstand immersion in water at 10 meters (32.8 feet) for 5 minutes at 25° C provided the HP-01 case and window are intact.

**PRICE IN U.S.A.:** With stainless steel case, $650. With gold-filled case, $750. Available only at fine jewelry stores.

**MANUFACTURING DIVISION:** CORVALLIS DIVISION
1000 N.E. Circle Boulevard
Corvallis, Oregon 97330 U.S.A.

**Edward A. Heinsen**

Ed Heinsen is manager of display production at HP's Corvallis, Oregon Division. He was section manager for the HP-01 and before that for the HP-67 and HP-97 Calculators. He was also with HP Laboratories for many years. Ed is listed as inventor on one patent and three patent applications, the latter related to the HP-01. He's a member of IEEE. Born in Clinton, Iowa, Ed attended Iowa State University, graduating in 1960 with a BSEE degree. He joined HP that same year, and in 1962 received his MSEE degree from Stanford University. Ed is married, has five children, and lives in Corvallis. He's a licensed private pilot and enjoys skiing and tennis.

**Bennie E. Helmso**

Ben Helmso has been with HP for seventeen years, serving as product designer, manufacturing engineering manager, Q.A. manager, and more recently as mechanical design and production supervisor for the HP-01. He's listed as co-inventor on two patent applications. Born in Los Angeles, Ben spent two years in the U.S. Navy before enrolling at the University of California at Berkeley. He graduated in 1960 with a BSEE degree and joined HP the same year. He's married, has two children, lives in Los Altos, California, and enjoys hunting, fishing, and backpacking.

**André F. Marion**

André Marion was project manager for the HP-01 and is now manager of the Corvallis Division's special projects group in Palo Alto, California. He joined HP in 1972 with extensive design and development experience in impact printing and magnetic tape drives, and he's listed as inventor on four patents related to those fields. Born in Nimes, France, André holds an Engineer's degree from Ecole Nationale Superieure d' Ingenieurs Arts et Metiers. He's married and has three children. He enjoys camping and hiking, and is good at carpentry and woodworking, skills he's currently using to remodel his home, an old house in Palo Alto.

**Robert Chin**

Bob Chin is a native of New York City. He received his SB, SM, and Engineer degrees, all in electrical engineering, from Massachusetts Institute of Technology in 1968, 1969, and 1970. Joining HP in 1970, he designed several CATV amplifiers and authored an IEEE paper on one of those designs. More recently, he was one of the principal designers of the HP-01, and is listed as inventor on several patent applications that came out of that project. He's now a project manager at HP's Corvallis Division and is married to a market researcher at the same division. Bob is interested in photography, camping, woodworking, and most sports, but for the past year his major project has been designing and building a home in Corvallis. Even with a contractor, Bob says it's been a trying experience, but ultimately a worthwhile one.

# Higher Precision in Oscilloscope Measurements of Very Short Time Intervals

*Incorporating electronic counter circuits in a delta-time oscilloscope enables 100-ps resolution in measurements of clock phasing, propagation delay and other digital system timing parameters.*

**by Ronald C. Westlund**

ONE CONSEQUENCE OF THE explosive growth of digital electronics is a definite need for means of making precise measurements of very short time intervals. It is by knowing timing parameters such as propagation delays, clock phasing, the time skew of control signals through gates, and the set-up and hold times of memory cells that the digital design engineer can determine the maximum clock rate at which his system will operate reliably. Higher precision in these timing measurements reduces the error margins that must be allowed for, permitting faster clock rates.

A substantial increase in the precision of oscilloscope measurements of very short time intervals was made possible by Hewlett-Packard's development of the dual-delayed sweep in 1973. The first oscilloscope to use this concept, the Hewlett-Packard Model 1722A,[1] incorporated a microprocessor to measure the voltage difference between selected points on the horizontal sweep waveform and convert the reading to time. The measurement is made quickly, unambiguously, and with a significant improvement in accuracy over earlier oscilloscope techniques. This technique, now commonly known as the delta-time

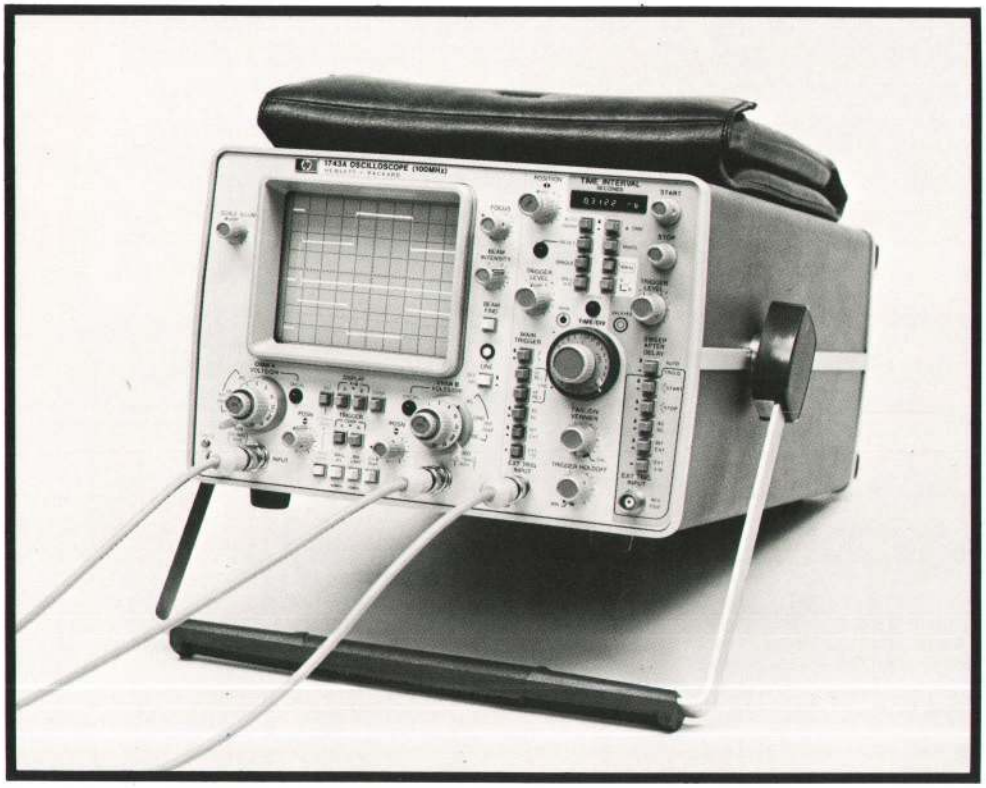


**Fig. 1.** *Model 1743A is a general-purpose, dual-channel, 100-MHz oscilloscope that has the capability of measuring very short time intervals with 100-ps resolution. By using a crystal-controlled oscillator as a time reference, and averaging readings, Model 1743A provides the most accurate time-interval measurement capability available in real-time oscilloscopes.*

technique, has proved to be so effective that it has been adopted by other oscilloscope manufacturers as well.

A further increase in the accuracy and ease of making measurements of very short time intervals has now been made possible by combining electronic counter circuits with the dual-delayed sweep. This technique is used in a new oscilloscope, HP Model 1743A (Fig. 1), to enable measurements of time intervals shorter than 15 $\mu$s with less than 100-ps error. Measurements of longer time intervals, up to 60 seconds, are made with 5-digit resolution and with errors less than 0.002% of reading $\pm 1$ count.

### Double Counting

The principle of the new delta-time technique is illustrated in Fig. 2. Counting begins at the start of a main sweep and continues to the point in the sweep indicated by the intensified marker position selected by the instrument's START control, in this case the leading edge of the second pulse (Fig. 2a). On the next sweep, a new count begins at the start of the sweep but continues to the point selected by the STOP control, in this case the trailing edge of the same pulse (Fig. 2b). The digital processing circuits then subtract the first reading from the second and present the result on the digital readout, giving pulse width directly.

By positioning the START and STOP markers appropriately, the user can measure other timing parameters. If in the example above the STOP marker were placed on the leading edge of the third pulse, the oscilloscope would give a reading of pulse period.

When the oscilloscope is displaying two waveforms in the alternate sweep mode, the START marker appears on the channel A trace and the STOP marker on channel B. As long as both traces are initiated by the same trigger source, the time delay between selected points on the waveforms can be measured. Thus, propagation delay, clock skew, and other such quantities are readily measured.

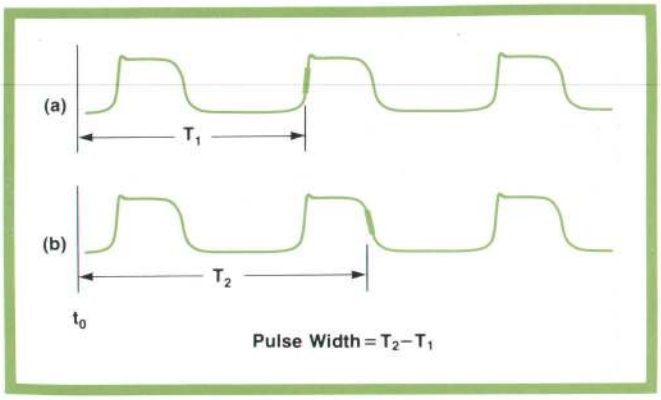


**Fig. 2.** *Model 1743A Oscilloscope alternately measures the time from the start of the sweep to a point selected by the START control (a) and to a second point selected by the STOP control (b). Obtaining the difference between the two readings gives the time between START and STOP points.*

The new delta-time technique is so precise that errors introduced into dual-channel measurements by inequalities in the signal paths from the test points through the probe cables, attenuators, and preamplifiers are perceptible. However, the magnitude of these errors is easily determined by connecting the oscilloscope's probes to the same test point and measuring the time delay between like points on the two waveforms. The result of this measurement can be used to correct subsequent measurements if a need exists.

### Delta Time

The intensified markers are generated by the oscilloscope's delayed sweep, which must be set to a sweep time shorter than the main sweep. The CRT thus shows the time duration of the DELAYED SWEEP as brightened segments on the displayed waveform (Fig. 3a). To obtain maximum accuracy in delta-time measurements, after positioning the markers over the two points of interest the user switches the instrument to the $\Delta$ TIME mode, which expands both brightened segments to full CRT screen width and displays both simultaneously (Fig. 3b). The numeric readout continues to display the time difference represented by the starting points of the segments but any two points on the same vertical axis will have this same time difference. So, by adjusting the START and STOP controls to bring the two points of interest to the same vertical graticule line, as shown in Fig. 3c, the user obtains a reading of the time interval between these points with maximum accuracy.

In addition to being useful for *measuring* time intervals, the delta time technique is also useful for *establishing* time intervals. For example, suppose that on the production line it is necessary to adjust a delay multivibrator's output to a particular pulse width. The oscilloscope's controls are adjusted so the numeric readout displays the desired pulse width. When the scope probes are connected to the test points, the test technician may initially be presented a display like that shown in Fig. 3b, but by adjusting the multivibrator timing control, he can cause the pulse leading and trailing edges to intersect at their 50% levels, as shown in Fig. 3c. The pulse then has the specified width.

### Accuracy

The accuracy obtainable with the new delta time technique is illustrated in Fig. 4. As can be seen, a substantial increase over other oscilloscope techniques is achieved. This is because the measurement is now referenced to a crystal-controlled time base—sweep linearity no longer affects measurement

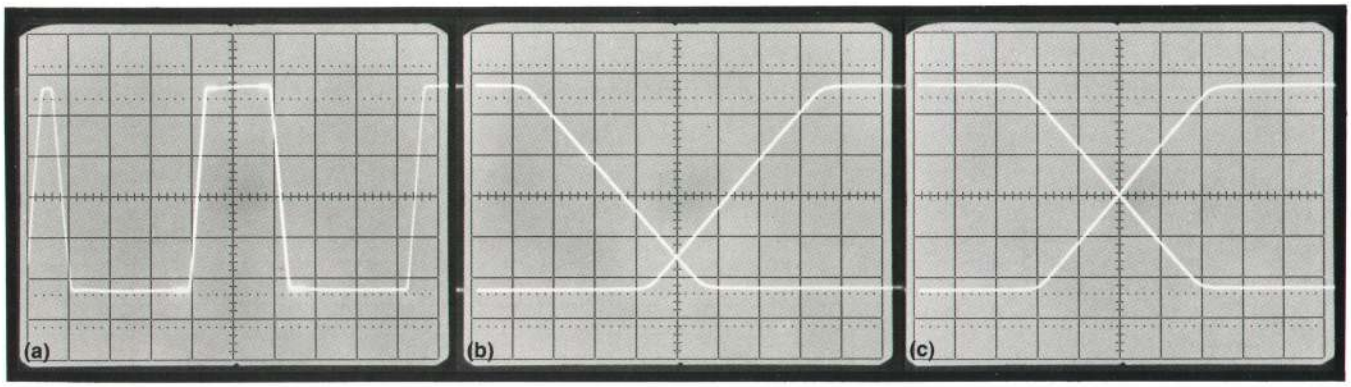


**Fig. 3.** *Time-interval measurements are made with Model 1743A by first adjusting the START and STOP controls so the brightened segments of the trace span the start and stop points of the measurement (a), then switching to the Δ TIME mode to expand both brightened segments to full screen width (b). The START and STOP controls are then adjusted so the desired start and stop points are on the same vertical graticule line (c), in this case the pulse 50% level.*

results. But what about counters? Quality counters do give higher resolution for longer time intervals and can have greater time base accuracy. They can also make measurements on single-shot events and some, just like the new Model 1743 Oscilloscope, can measure time intervals right down to zero time duration.

Model 1743A enhances measurement accuracy by being able to provide a visual indication of where the start and stop points occur. It can also accommodate a wider range of input signal amplitudes than most counters can. Trigger hysteresis errors have been eliminated by processing the trigger waveform such that triggers of either polarity have the same polarity when applied to the trigger-level comparator. In addition, certain inherent measurement errors, such as delays in opening and closing the counter gate, are cancelled by the subtraction process used in the new delta-time measurement technique. Furthermore, Model 1743A locks out all of the events capable of triggering a time-interval measurement except those selected visually.

### Time-Interval Averaging

The time reference in Model 1743A is a 100-MHz crystal-controlled oscillator that gives a basic resolution of 10 ns in time-interval measurements. However, during measurements of very short time intervals, accuracy and resolution are increased by the use of time-interval averaging, which reduces the ±1-count uncertainty inherent in counter measurements by a factor of $\sqrt{n}$, where n is the number of readings averaged.[2] On the fastest main sweeps (≤0.5 μs/div), 10,000 readings are averaged to give a resolution of 100 ps. On slower sweeps, the number of readings averaged and the resolution obtained is determined by the five-digit (plus exponent) display, as listed in the following table.

| Sweep time | Number of readings averaged | Display resolution |
|---|---|---|
| 0.1 to 0.5 μs/div | 10,000 | 100 ps |
| 1 to 5 μs/div | 1000 | 1 ns |
| 10 to 50 μs/div | 100 | 10 ns |
| 0.1 to 0.5 ms/div | 10 | 100 ns |
| 1 to 5 ms/div | Direct | 1 μs |

For sweep times of 10 ms/cm and slower, the 100-MHz clock is divided down to prevent display overflow. The following table shows the resolutions obtained.

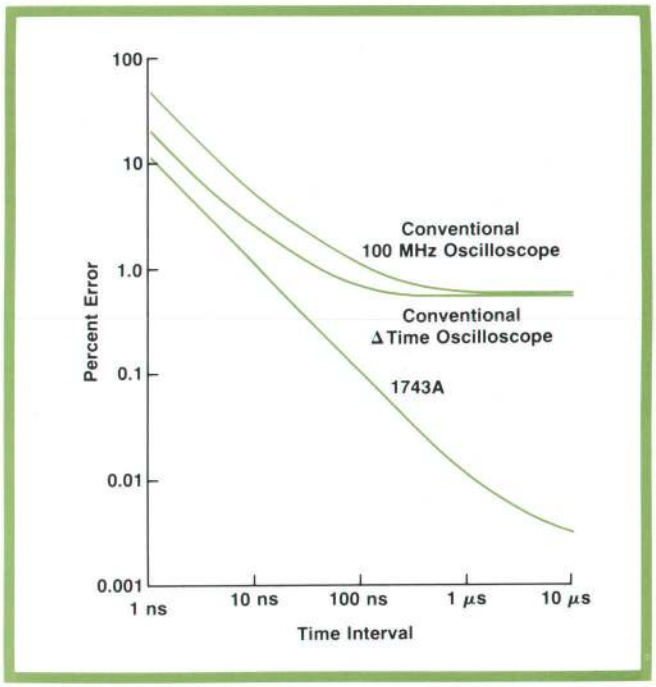


**Fig. 4.** *The accuracy of time-interval measurements made by Model 1743A as compared to other oscilloscopes is shown by these graphs of percent error as a function of time interval duration.*

| Sweep time | Display resolution |
|---|---|
| 10 to 50 ms/div | 10 $\mu$s |
| 0.1 to 0.5 s/div | 100 $\mu$s |
| 1 and 2 s/div | 1 ms |

In some cases, it is possible to obtain six-digit resolution, as explained in the following.

### Calibrated Vernier

Because sweep calibration is no longer a factor in the accuracy of measurements made by the new delta-time technique, the sweep vernier can be used to modify the sweep time for the convenience of the user without affecting accuracy. He can thus use the vernier to align clock pulses exactly with the graticule lines or bring an off-screen pulse on screen. Actually, accuracy can be enhanced since bringing an off-screen pulse on screen with the vernier means the user can switch to a faster sweep range to view the pulse with higher resolution. For example, the older delta-time technique would require a sweep time of 2 $\mu$s/div to measure the width of a 12 $\mu$s pulse. With the new technique, the user can switch to a sweep time of 0.5 $\mu$s/div and use the sweep vernier, which has a 3:1 range, to bring the pulse entirely into view. The pulse can then be measured with 100-ps resolution.

In some cases using the vernier this way could result in a display overflow, but the display can accommodate a one-decade overflow. It indicates this by causing a decimal point to appear on each side of the exponent. If the two decimal points appear when the user switches to a shorter sweep time and uses the sweep vernier to encompass the desired portion of the waveform, he gets a six-digit reading by mentally inserting a 1 to the left of the most significant digit.

### First-Pulse Measurements

The inevitable ramp nonlinearities at the start of a sweep do not affect measurement accuracy, just as sweep calibration is not a factor. Hence, the START marker can be positioned at the sweep start, allowing examination of events close to the sweep trigger. This "first pulse" capability facilitates measurements of low-repetition-rate events that formerly required very long sweep times with a consequent loss of measurement resolution. The older delta time technique could not be used for measurements on the event that triggered the sweep nor could it measure non-cyclic events, such as software-generated flags, that are readily measured with the new technique.

### Triggered Measurements

Unlike earlier delta-time techniques, the TRIGGER AFTER DELAY mode can be used with Model 1743A when making time-interval measurements. In this mode, the TRIGGER LEVEL and SLOPE controls are used to establish the start and stop points of the measurement. For example, in making a pulse-width measurement, the START marker is set to trigger on a positive-going slope and the STOP marker on a negative-going slope. The TRIGGER LEVEL control is then set at the 50% points (in this mode start and stop points are always at the same level). To determine exactly where the trigger level is, the user can switch to the Δ TIME (delayed sweep) mode and note where the two waveforms cross.

The significance of the TRIGGER AFTER DELAY mode is that once the trigger level has been established, the

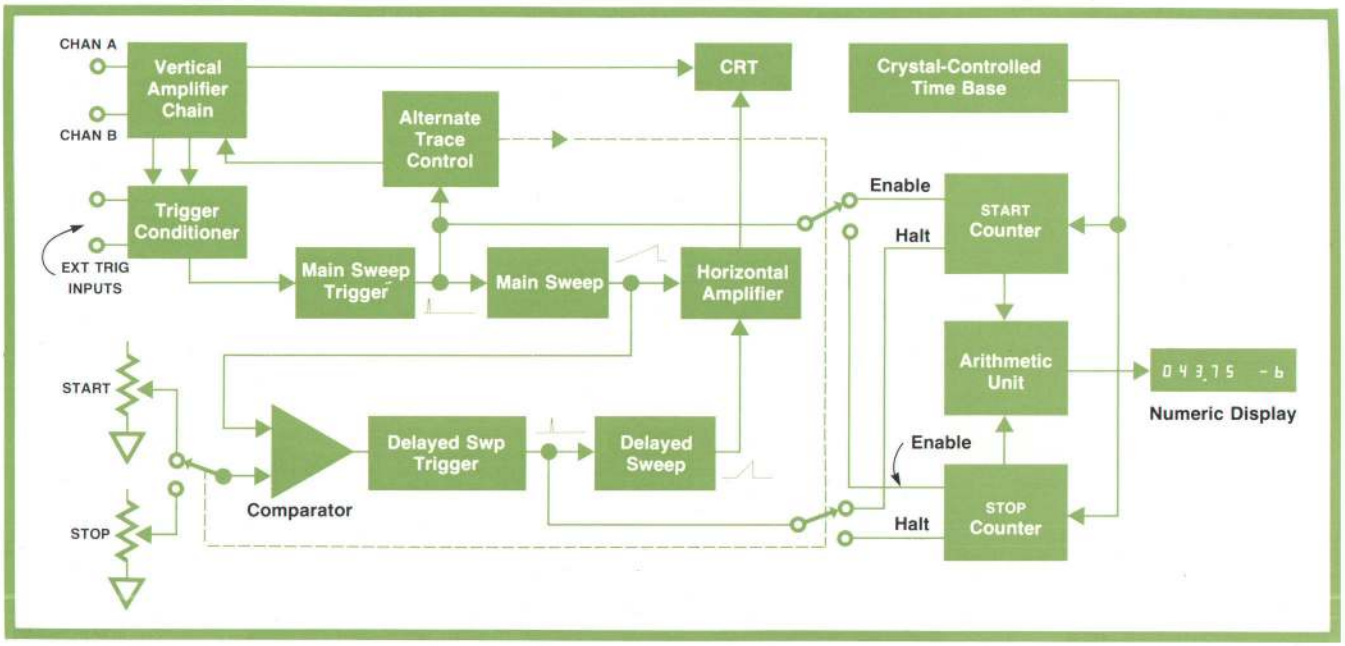


**Fig. 5.** *Simplified block diagram of the Model 1743A Oscilloscope.*

oscilloscope can be switched to the MAIN SWEEP mode and maximum accuracy and resolution are still obtained with the convenience of having an overall display of the waveform(s), removing any chance of measurement error because of misplacement of the START and STOP markers. This mode greatly simplifies certain measurements. For example, changes in pulse width as the pulse repetition rate or temperature are varied can be read directly without readjusting controls, since the START and STOP points automatically track shifts in the leading or trailing edges of the pulses. It also simplifies circuit adjustments since the digital display tracks changes in the time interval as the circuit under test is adjusted. Because the START and STOP controls need not be adjusted precisely when using the TRIGGER AFTER DELAY mode, relatively unskilled personnel can obtain accurate and repeatable measurement using this mode.

### A General-Purpose Oscilloscope

The basic oscilloscope circuits in the new Model 1743A are the same as those in the Model 1740A.[3] Both are 100-MHz dual-trace oscilloscopes that have a third trace for displaying the waveform applied to the sweep trigger circuit. Vertical deflection factors range from 5 mV/div to 20 V/div and a ×5 magnifier gives deflection factors of 1 mV/div to 40 MHz on both channels. Sweep times range from 50 ns/div to 2 s/div and a ×10 magnifier extends the fastest sweep to 5 ns/div. With sensitive, stable triggering, precision time bases, and bright, sharp traces on an 8×10-cm display, these are versatile instruments suitable for a wide variety of uses. The delta-time capability gives an additional dimension to the Model 1743A.

The simplified block diagram of Fig. 5 shows how the counting circuits interface to the Model 1743A's oscilloscope circuits. The main-sweep trigger enables both counters alternately and the delayed sweep trigger halts them. However, on one sweep, the delayed sweep triggers when the main sweep ramp reaches the level selected by the START control. On the next sweep, it triggers when the main sweep reaches the level of the STOP control. The arithmetic unit then finds the difference between the two counts, averages the results, and presents the result on the numeric display.

### Removing Anomalies

Fig. 6 shows how the subtraction process helps to

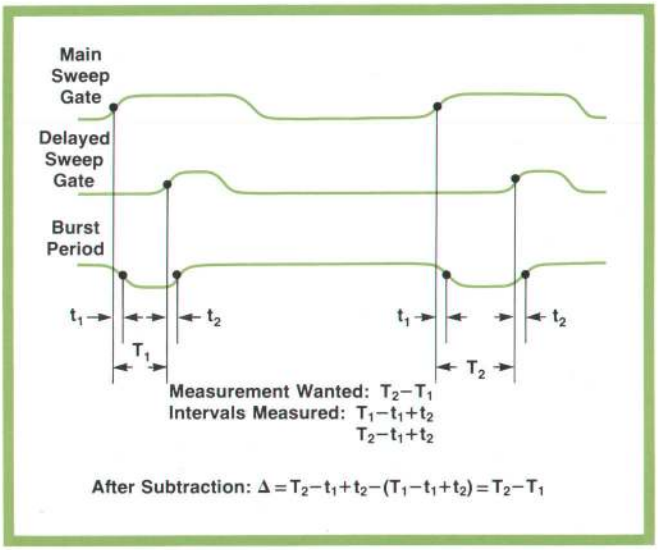


**Fig. 6.** *Propagation delays ($t_1$ and $t_2$) that could alter measurement results are eliminated by the subtraction process.*

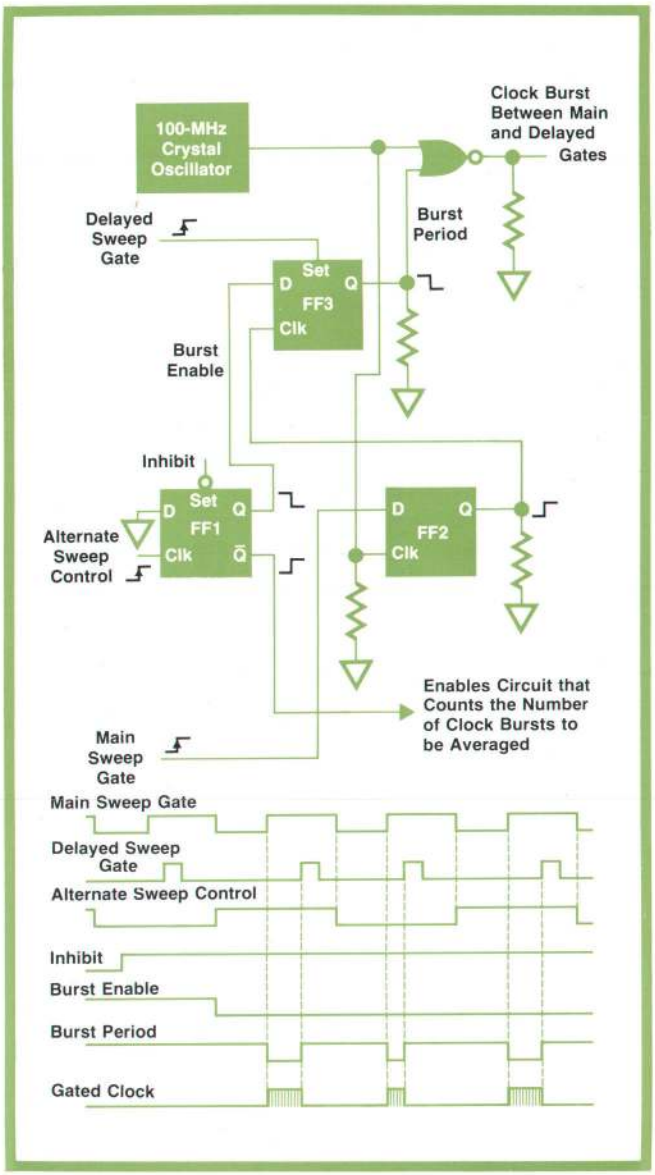


**Fig. 7.** *Measurement-enable circuit generates bursts of clock pulses that extend from the start of the main sweep to the start of the delayed sweep. The start of each burst is synchronized to the clock pulses.*

## On Delta-Time Measurements

The role of delta-time measurements in establishing a system clock rate can be illustrated by a hypothetical example. Let us assume that we have a system that we wish to operate at a clock rate of 10 MHz and that it is necessary to partition the 100-ns clock period so five events can occur in sequence between clocks. As usual, temperature-compensated one-shot multivibrators define the clock period subintervals.

Assume further that the activity that must take place within each subinterval is analyzed and, using worst-case calculations, it is determined that the minimum time lapse for each subinterval is 20 ns. We can now construct an error budget where the uncertainty in establishing the first 20-ns edge is added to the uncertainty in the second edge, and so on. If a high-quality analog oscilloscope were to be used to measure the time intervals as the multivibrators are adjusted, the error build-up would be:

| Clock-to-Edge Interval | Instrumentation Error | Time Error |
|---|---|---|
| 20 ns | ±2.5% | ±0.5 ns |
| 40 ns | ±1.5% | ±0.6 ns |
| 60 ns | ±1.0% | ±0.6 ns |
| 80 ns | ±1.0% | ±0.8 ns |
| | Cumulative total: | ±2.5 ns |

This tells us that the system clock period must be extended by at least 2.5 ns to guarantee that each subinterval is not less than 20 ns in duration.

This analysis was made at the very limits of the oscilloscope's specified accuracy so, to account for long-term degradation of the instrument's calibration, we would want to extend the clock period by 5 ns. More likely, to assure an adequate margin for the measurements in a production environment, we would extend the clock period 10 ns. Thus, our system would be specified to operate at a clock rate of about 9 MHz, rather than 10 MHz.

The following table shows the error budget if a Model 1743A Oscilloscope were used to establish the subintervals.

| Clock-to-Edge Interval | Instrumentation Error | Time Error |
|---|---|---|
| 20 ns | ±0.5% | ±0.1 ns |
| 40 ns | ±0.2% | ±0.8 ns |
| 60 ns | ±0.1% | ±0.096 ns |
| 80 ns | ±0.12% | ±0.096 ns |
| | Cumulative total: | ±0.372 ns |

Because of the long-term stability of the crystal-controlled time base in Model 1743A, we would feel safe in extending the clock period by only 1 ns in this case. Furthermore, the triggered delta-time measurement mode of Model 1743A reduces the chances for human error, enabling the 1-ns allowance for error to be easily and consistently met in a production environment.

**Where Moderate Accuracy is Sufficient**

There are many situations where errors of 1% to 3% can be tolerated in time-interval measurements. One would assume that a high-quality analog oscilloscope is accurate enough for these measurements but it is not generally appreciated that timing accuracy degrades as the measured time interval becomes a smaller and smaller part of the total sweep width. For example, 3% accuracy in a measurement of 20 ns degrades to about 5% at 10 ns and 9% at 5 ns. If a sweep time longer than 20 ns/div were required to accommodate all of the data on screen, measurement errors could be far greater than 10%.

With its "calibrated vernier," Model 1743A provides an accuracy of 2% for 5-ns time intervals with sweep times as long as 1.5 μs/div, and 1% for 10-ns intervals.

**What about Bandwidth?**

If the transition times of digital signals are faster than the response time of an oscilloscope, the oscilloscope will not display the signals with full fidelity. The question is, how will this affect the accuracies of time-interval measurements?

Analysis (to be published) can show that limited bandwidth does not affect accuracy as much as one might suppose. The point is, the transition times of both edges involved in a time-interval measurement are delayed similarly so, if a measurement is made at the 50% level, the time interval is little affected. A measurement of the propagation delay of a 2-ns ECL transition can be made with the 100-MHz Model 1743A (transition time 3.5 ns) with no error attributable to bandwidth when the transition times and slopes of both edges are identical. However, if the transition time of the second edge is slowed, a small error occurs because the slower edge is not subject to the same degree of distortion as the faster edge. If the first edge were 2 ns and the second were 10 ns, a 70-ps error would be introduced.

If the slopes of the edges are different, then significantly greater errors are introduced when measurements are made at levels other than 50%. Since most device specifications and pulse width definitions are made at the 50% level, the 100-MHz Model 1743A is entirely capable of making timing measurements with bandwidth errors less than ±150 ps in logic families up to and including ECL 10K.

overcome a problem that can occur with conventional clock-counting time-interval measurements. This problem concerns errors that can result if propagation delays in the start and stop channels are different, which would alter the time difference between start and stop points.

Referring to Fig. 6, it is desired to measure time intervals $T_1$ and $T_2$ and find their difference, but because of propagation delays in the main and delayed sweep triggers ($t_1$ and $t_2$ respectively), the actual gated counts are equivalent to $T_1 - t_1 + t_2$ and $T_2 - t_1 + t_2$. However, as shown in Fig. 6, the subtraction process eliminates $t_1$ and $t_2$ in the results, leaving $T_2 - T_1$, the quantity desired.

Another potential problem concerns the asynchronous nature of the main sweep trigger with respect to the crystal-controlled time base. It is quite possible that this trigger could open the counter gate in the middle of a clock pulse, making the first pulse period shorter than those following. Since the counters are edge-triggered, it is important that this first pulse have the same period as those following to avoid anomalous counter operation.[2]

The enable circuit that gates clock pulses to the counters is shown in Fig. 7 along with a timing diagram. This circuit operates as follows. When the inhibit signal, which suppresses activity for a short recovery period following a measurement, goes to the

high state, the next rising edge of the alternate sweep control clocks the Q output of FF1 to the low state (burst enable). When the main sweep gate subsequently occurs, the next clock edge clocks the Q output of FF3 low (burst period). This first clock pulse and the following ones are then gated to the counters until the delayed sweep gate occurs, which sets FF3, closing the clock pulse gate (the gate could close during the last pulse but this is of no consequence since the leading edge has already occurred).

The pulse-burst sequence repeats until a counter has determined that the necessary number of sequences have occurred for the averaging process. The "end-of-average" signal then stores the accumulated counts, resets the counters, and initiates the inhibit signal (the setting of the MAIN TIME/DIV range switch determines the number of pulse bursts to be averaged, along with the position of the decimal point in the display and the value of the exponent).

The stored numbers are written into the arithmetic unit, where their difference is found, and then decoded and displayed.


### Acknowledgments

Tom Bohley and Al Best contributed to the electrical design of Model 1743A. Mechanical design was by John Campbell and George Blinn. Many helpful ideas were provided by Lab Section Leader Walt Fischer and Product Managers Dick Stone and Vic Bunze.


### References


1. W.A. Fisher and W.B. Risley, "Improved Accuracy and Convenience in Oscilloscope Timing and Voltage Measurements," Hewlett-Packard Journal, December 1974.
2. D.C. Chu, "Time Interval Averaging: Theory, Problems, and Solutions," Hewlett-Packard Journal, June 1974.
3. A.I. Best, "A 100-MHz Analog Oscilloscope for Digital Measurements," Hewlett-Packard Journal, December 1975.

**Ronald C. Westlund**

Ron Westlund joined HP in 1970, the same year he graduated from the University of Utah with a BSEE degree. He contributed to the Models 1710A and 1741A Oscilloscopes and the 1620A Pattern Analyzer before undertaking project leadership of the 1743A. In leisure hours, Ron gets involved in church activities and he enjoys playing golf and handball, and going hunting. He is married and has one small daughter.

## SPECIFICATIONS
### Model 1743A Oscilloscope

#### Vertical Display Modes

Channel A; channel B; channels A and B displayed alternately on successive sweeps (ALT) or by switching between channels at 250-kHz rate with blanking during switching (CHOP); channel A plus channel B (algebraic addition); and trigger view.

#### Vertical Amplifiers (2)

Bandwidth and Rise Time at all deflection factors from 0°C to +55°C.

**BANDWIDTH** (3 dB down from 8 div reference signal):
DC-COUPLED: dc to 100 MHz in both 50Ω and 1 MΩ input modes.
AC-COUPLED: approx. 10 Hz to 100 MHz; 1 Hz with 10:1 divider probes.

**BANDWIDTH LIMIT:** limits upper bandwidth to 20 MHz.

**RISE TIME:** ≤3.5 ns measured from 10% to 90% points of 6-div input step.

**DEFLECTION FACTOR**
RANGES: 5 mV/div to 20 V-div in 1, 2, 5 sequence, accurate within 3%.
VERNIER: continuously variable between all ranges; extends maximum deflection factor to at least 50 V/div.

**POLARITY:** channel B may be inverted by front-panel pushbutton.

**DELAY LINE:** input signals are delayed sufficiently to view triggering edge of input pulse.

**INPUT COUPLING:** selectable AC or DC, 50Ω (dc), or ground. Ground position disconnects input connector and grounds amplifier input.

**INPUT RC** (selectable)
AC OR DC: 1 MΩ ±2% shunted by approx. 20 pF.
50 OHM: 50 Ω ±3%.

**A + B OPERATION**
AMPLIFIER: bandwidth and deflection factors are unchanged; channel B may be inverted for A − B operation.
DIFFERENTIAL (A − B) COMMON MODE: CMRR is at least 20 dB from dc to 20 MHz. Common mode signal amplitude equivalent to 8 divisions with one vernier adjusted for optimum rejection.

**VERTICAL MAGNIFICATION (×5)**
BANDWIDTH: 3 dB down from 8-div reference signal.
DC-COUPLED: dc to approximately 40 MHz.
AC-COUPLED: approximately 10 Hz to 40 MHz.
RISE TIME: ≤9 ns (measured from 10% to 90% points of 8-div input step).
DEFLECTION FACTOR: increases sensitivity of each deflection factor setting by factor of 5 with maximum sensitivity of 1 mV on channels A and B.

**TRIGGER SOURCE**
CHANNEL A: all display modes triggered by channel A signal.
CHANNEL B: all display modes triggered by channel B signal.
COMPOSITE: all display modes triggered by displayed signal except in Chop. In Chop mode, trigger signal is derived from channel A.
LINE FREQUENCY: trigger signal is derived from powerline frequency.

**TRIGGER VIEW:** Displays internal or external trigger signal. In Alternate or Chop mode, channel A, channel B, and trigger signal are displayed. In channel A or B mode, Trigger View overrides that channel. Internal trigger signal amplitude approximates vertical signal amplitude. Ext. trigger signal deflection factor is approximately 100 mV/div, or 1 V/div in EXT ÷ 10. Triggering point is approximately center screen. With identically timed signals to a vertical input and the Ext. trigger input, trigger signal delay is ≤3.5 ns.

#### Horizontal Display Modes

Main, Δ time, mixed, mag ×10, and A vs B.

**MAIN AND DELAYED TIME BASE RANGES:**
MAIN: 50 ns/div to 2 s/div in 1, 2, 5 sequence.
DELAYED: 50 ns/div to 20 ms/div in 1, 2, 5 sequence.

**ACCURACY, 50 ns/div to 20 ms/div** (add 1% for 50 ms/div to 2 s/div ranges):

| Accuracy | | Temp Range |
|---|---|---|
| ×1 | ×10 | |
| ±3% | ±4% | 0°C to +15°C |
| ±2% | ±3% | +15°C to +35°C |
| ±3% | ±4% | +35°C to +55°C |

**MAIN SWEEP VERNIER:** continuously variable between all ranges, extends slowest sweep to at least 5 s/div.

**MAGNIFIER (×10):** expands all sweeps by factor of 10.

**CALIBRATED SWEEP DELAY**
DELAY TIME RANGE: 0 to 10×Main Time/Div settings of 100 ns to 2 s.

**DIFFERENTIAL TIME MEASUREMENT**
ACCURACY: ±0.002% of reading ±1 count from +15°C to +35°C; ±0.005% of reading ±1 count from 0°C to +15°C and +35°C to +55°C.
TIME RESOLUTION OF ±1 COUNT:

| Sweep Ranges/div | ±1 Count | Readings Averaged |
|---|---|---|
| 0.1 μs, 0.2 μs, 0.5 μs | ±100 ps | 10 000 |
| 1 μs, 2 μs, 5 μs | ±1 ns | 1000 |
| 10 μs, 20 μs, 50 μs | ±10 ns | 100 |
| 0.1 ms, 0.2 ms, 0.5 ms | ±100 ns | 10 |

For intervals greater than 0.5 ms, ±1 count becomes insignificant and accuracy can be considered a percent of reading.
READOUT: 5-digit LED plus exponent.
CRYSTAL AGING: 0.0005% per year.

**DELAY JITTER:** <0.002% (1 part in 50,000) of maximum delay in each step from +15°C to +35°C; <0.005% (1 part in 20,000) from 0°C to +15°C and +35°C to +55°C.

#### Triggering

**MAIN SWEEP**
NORMAL: Sweep is triggered by internal or external signal.
AUTOMATIC: bright baseline displayed in absence of input signal. Triggering is same as Normal above 40 Hz.
SINGLE: sweep occurs once with same triggering as Normal; reset pushbutton arms sweep and lights indicator.
INTERNAL: dc to 25 MHz on signals causing 0.5 divisions or more vertical deflection, increasing to 1.5 division of vertical deflection at 100 MHz in all display modes (required signal level is increased by 2 when in Chop mode and by 5 when ×5 vertical magnifier is used).
EXTERNAL: dc to 50 MHz on signals of 65 mV p-p or more increasing to 150 mV p-p at 100 MHz (required signal level is increased by 2 when in Chop mode).

**DELAYED SWEEP** (SWEEP AFTER DELAY)
AUTO: delayed sweep automatically starts at end of delay period.
TRIG: delayed sweep is armed and triggerable at end of delay period.
INTERNAL: dc to 25 MHz on signals causing 1 division or more vertical deflection to 2 div. at 100 MHz in all display modes (required signal level is increased by 2 when in Chop mode and by 5 when ×5 vertical magnifier is used).
EXTERNAL: dc to 50 MHz on signals of 100 mV p-p or more increasing to 200 mV p-p at 100 MHz (required signal level is increased by 2 when in Chop mode).

**EXTERNAL INPUT RC:** approximately 1 MΩ shunted by approx. 20 pF.

**MAXIMUM EXTERNAL INPUT:** 250 V (dc + peak ac) or 500 V p-p ac at 1 kHz or less.

**COUPLING:** AC, DC, Main LF REJ, or Main HF REJ.
AC: attenuates signals below approx. 20 Hz.
LF REJECT (MAIN SWEEP): attenuates signals below approx. 4 kHz.
HF REJECT (MAIN SWEEP): attenuates signals above approx. 4 kHz.

**TRIGGER HOLDOFF** (MAIN SWEEP): increases sweep holdoff time in all ranges.

**CALIBRATED MIXED TIME BASE**
Dual time base in which main time base drives first portion of sweep and delayed time base completes sweep at faster delayed sweep rate. Also operates in single sweep mode. Accuracy, add 2% to main time base accuracy.

#### General

**CATHODE-RAY TUBE:** Hewlett-Packard, 12.7 cm (5 in.) rectangular CRT, post accelerator, approximately 15 kV accelerating potential, aluminized P31 phosphor.

**Z-AXIS INPUT** (INTENSITY MODULATION): +4 V, >50-ns width pulse blanks trace of any intensity, usable up to 10 MHz for normal intensity. Input R, 1 kΩ ±10%. Maximum input ±20 V (dc + peak ac).

**REAR PANEL OUTPUTS:** main and delayed gates, 0 V to >+2.5 V capable of supplying approximately 5 mA.

**POWER:** 100, 120, 220, 240 Vac, ±10%; 48 to 440 Hz; 100 VA max.

**WEIGHT:** 13 kg (28.6 lb).

**DIMENSIONS:** 335 mm W × 197 mm H × 492 mm D (13.2 × 7.75 × 19.4 in.)

**ACCESSORIES FURNISHED:** blue light filter, front panel cover, power cord, vinyl accessory storage pouch, operator's guide and service manual; two Model 10041A, 10:1 divider probes approximately 2 m (6.6 ft) long.

**OPTIONS**
001: fixed power cord in lieu of detachable power cord.
101: LOGIC STATE DISPLAY—single pushbutton (Gold Button) interface option for operation with HP Model 1607A Logic State Analyzer. Permits single pushbutton switching between functional, 16-channel logic state analysis and electrical analysis of digital data. Option 101 removes the A vs B mode and replaces it with the State Display pushbutton.

**PRICES IN U.S.A.:**
MODEL 1743A OSCILLOSCOPE, $3300.
OPT 001, add $15. OPT 101, add $105.

**MANUFACTURING DIVISION:** COLORADO SPRINGS DIVISION
1900 Garden of the Gods Road
Colorado Springs, Colorado 80907 U.S.A.

# A Wide-Ranging, Automatic LCR Meter for Stand-Alone or Systems Applications

*Microprocessor control broadens the capabilities of this speedy LCR meter and makes it readily adaptable to BCD or HP-IB automatic systems.*

**by Masahiro Yokokawa and Keiki Kanafuji**

FOR AN ELECTRONIC CIRCUIT to meet performance goals, the values of the components used in assembling the circuit must fall within certain ranges, some wide, some narrow. Despite increasing sophistication in the design and manufacture of passive circuit components, differences between supposedly identical components do exist and the ranges of values encountered often exceed acceptable limits.

Thus, most electronic laboratories, quality-control labs, and receiving departments are equipped to measure the actual values of the components with which they are concerned, a process that is not only time consuming, but one that often introduces errors of its own. To speed these measurements, and reduce the human errors that arise in this activity, late-model LCR meters, such as the Model 4261A described in a recent issue of the HP Journal,[1] have been designed with a high degree of automation.

A new LCR meter, Model 4262A, uses a microprocessor to further automate procedures while increasing the instrument's capabilities without incurring significantly greater costs. To measure the value of a passive component with this instrument (Fig. 1), it is only necessary to select the measurement function and loss parameter—i.e., resistance (R), capacitance (C), or inductance (L), and dissipation factor (D) or quality factor (Q)—select the appropriate test frequency, and connect the component to the test terminals. The instrument automatically switches to the correct measurement range, selects the preferred circuit mode, and presents results on the 3½ digit displays in about 250 ms without any time-consuming balancing adjustments. The user, however, can have full manual control of the instrument at any time simply by pressing the appropriate front-panel pushbuttons.

The front-panel control arrangement is similar to manually controlled instruments (see Fig. 1) speeding familiarization with the instrument. As a further safeguard against the possibility of unintentional missettings, the RANGE and CIRCUIT MODE functions automatically revert to AUTO whenever the L, C, or R function keys are pressed after manual modes have been in use. Since most measurements made with this kind of instrument are made on capacitors, when it is first turned on the new LCR meter automatically sets itself for the CD mode using a 1-kHz test frequency.

### Enhanced Capability

Besides autoranging, self-triggering, and automatic selection of the appropriate circuit mode (series or parallel), the microprocessor brings several other capabilities to the instrument at little cost. Deviation measurement is one. When the ΔLCR key is pressed,

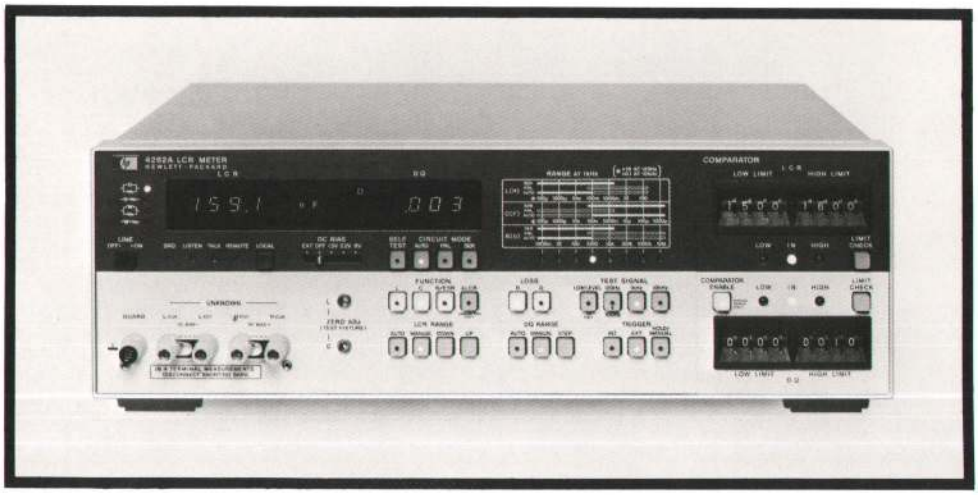


**Fig. 1.** *Model 4262A LCR Meter, shown here with the comparator option installed, measures the inductance (L), capacitance (C), resistance (R), dissipation factor (D), and quality factor (Q) of components with 3½ digit resolution. Three test frequencies (120 Hz, 1 kHz, and 10 kHz) enable measurements of a wide range of component values.*

the measurement value currently on display is stored, the display resets to zero, and the present measurement range is held. The result of the next measurement is then displayed as the difference between the new measurement value and the stored value. Besides checking device deviations during incoming inspection, this mode is also useful for monitoring the changes in device performance caused by variations in temperature or bias voltage.

For go/no-go measurements, a comparator option provides two pairs of thumbwheel switches on the front panel, one pair for LCR and one for DQ. Once high and low limits are established with these switches, a green light turns on when measured values are within the selected limits and a red light turns on when they are outside the limits. Electrical indications are also provided at a rear-panel connector.

Self test is another capability obtained at low cost with the microprocessor. At turn on, all LED indicators and all segments of the display digits light up momentarily to verify that all are functioning. Then, when the SELF TEST button is pressed while the input terminals are open (if the C measurement function is selected), or shorted (with the L or R measurement function), the instrument tests its digital section and the process amplifier and phase detector/integrator in the analog section, through five ranges. If all goes well, the word PASS appears in the LCR window and the user can be assured that the instrument is functioning correctly (this, however, is not a check on the instrument's accuracy). If there is a problem, the word FAIL is displayed, the range is held, and a code number indicating the location of the problem appears in the DQ window.

Other capabilities that the microprocessor gives the new LCR meter include low-cost HP interface bus (HP-IB)* and BCD-output options. In earlier LCR meters, an HP-IB interface very often cost more than the instrument itself but because of the microprocessor, the cost of the HP-IB interface for Model 4262A is less than one-fifth that of earlier interfaces. The new LCR meter may thus be interfaced readily to a printer for logging measurement results, or to a desktop computer and/or other instruments for programmed measurements and statistical analyses of measurement results.

When the new instrument is equipped with the HP-IB option, all functions except DC BIAS are programmable through the HP-IB. The current status of the instrument (FUNCTION, CIRCUIT MODE, AUTORANGE, etc.) is made visible by illumination of the LED indicators in the corresponding front-panel keys.

### Wide-Ranging Measurements

The new instrument has a 10-kHz test frequency in addition to the customary 120-Hz and 1-kHz test frequencies. The 10-kHz test frequency extends the low-end C and L measurement ranges respectively to 10 pF and 10 $\mu$H full scale, giving the new instrument the ability to measure components over exceptionally wide ranges: inductance from 0.01 $\mu$H (the limit of resolution) to 1999 H, capacitance from 0.01 pF to 19.99 mF, resistance from 1 m$\Omega$ to 19.99 M$\Omega$, dissipation factor from 0.001 to 19.9, and quality factor from 0.05 to 1000. With these wide ranges, the instrument may be used to measure RF coils, dielectric materials, electrolytes, the internal resistance of batteries, and the high dissipation factor of delay lines, as well as

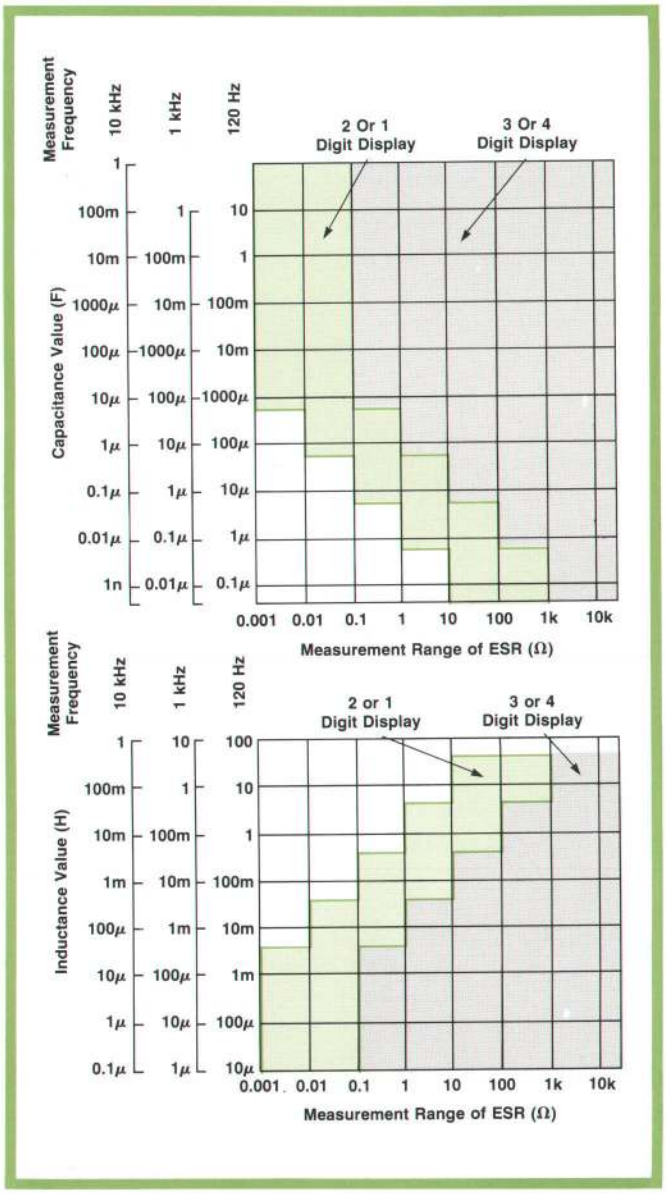


**Fig. 2.** *Capacitance and inductance ranges over which the equivalent series resistance (ESR) can be measured with the Model 4262A LCR Meter. The 10-kHz test frequency extends these ranges by a factor of 10 over those usually found in meters of this type.*

*Hewlett-Packard's implementation of IEEE Standard 488-1975.

the values of discrete components.

In particular, the new LCR meter can measure the ESR (equivalent series resistance) of a capacitor to very low values, a significant measurement if the capacitor is to be used for bypass applications. With the 10-kHz test frequency, the reactance of a wide range of capacitors becomes low enough for the ESR to be a significant, and measurable, part of the total impedance, as plotted in Fig. 2. At 10 kHz, the resolution of an ESR measurement is 1 mΩ for capacitors larger than 10 μF. A five-terminal input (two for voltage, two for current, and one for a guard) is provided to minimize errors. Internally-generated bias levels of 1.5V, 2.2V and 6V are also provided, primarily for measurements on electrolytic capacitors.

Small values of capacitance, such as the junction capacitance of semiconductor devices, can be measured with the low-level (50 mV) test signal level that is available. Normally, the test signal level is 1V rms.

Typical measurement accuracy is 0.2%. On the low-end ranges, the test-fixture parasitic reactances can affect the accuracy of the measurement, so front-panel C and L offset controls are provided to null out parasitics up to 10 pF and 1 μH. The compensation technique is explained in Fig. 3.

**Internal Operations**

Model 4262A LCR Meter finds the values of L, C, R, D, and Q by determining the vector ratio of the voltage across the device under test (DUT) to the current flowing through the device, in the same manner as the Model 4261A LCR Meter.[1]

A block diagram is shown in Fig. 4. The voltage across the device is represented by $e_1$ in the diagram and the current by voltage $e_2$, which is proportional to the current flowing through range resistor $R_R$ in series with the unknown. Op amp A3 assures accurate current flow by maintaining the LOW input terminal at virtual ground.

The four-phase generator supplies a signal shifted in precise increments of 90° with respect to its input for use as a reference by the phase detector. The integrator and comparator are part of a dual-slope A-to-D converter of the type widely used in digital voltmeters.

As an example of how all this fits together, assume that a capacitor is being measured in the parallel-circuit mode. Voltage $e_1$ is applied to the phase detector and voltage $e_2$, shifted 90°, serves as the phase detector reference. The output of the phase detector is applied to the integrator, which starts from the zero

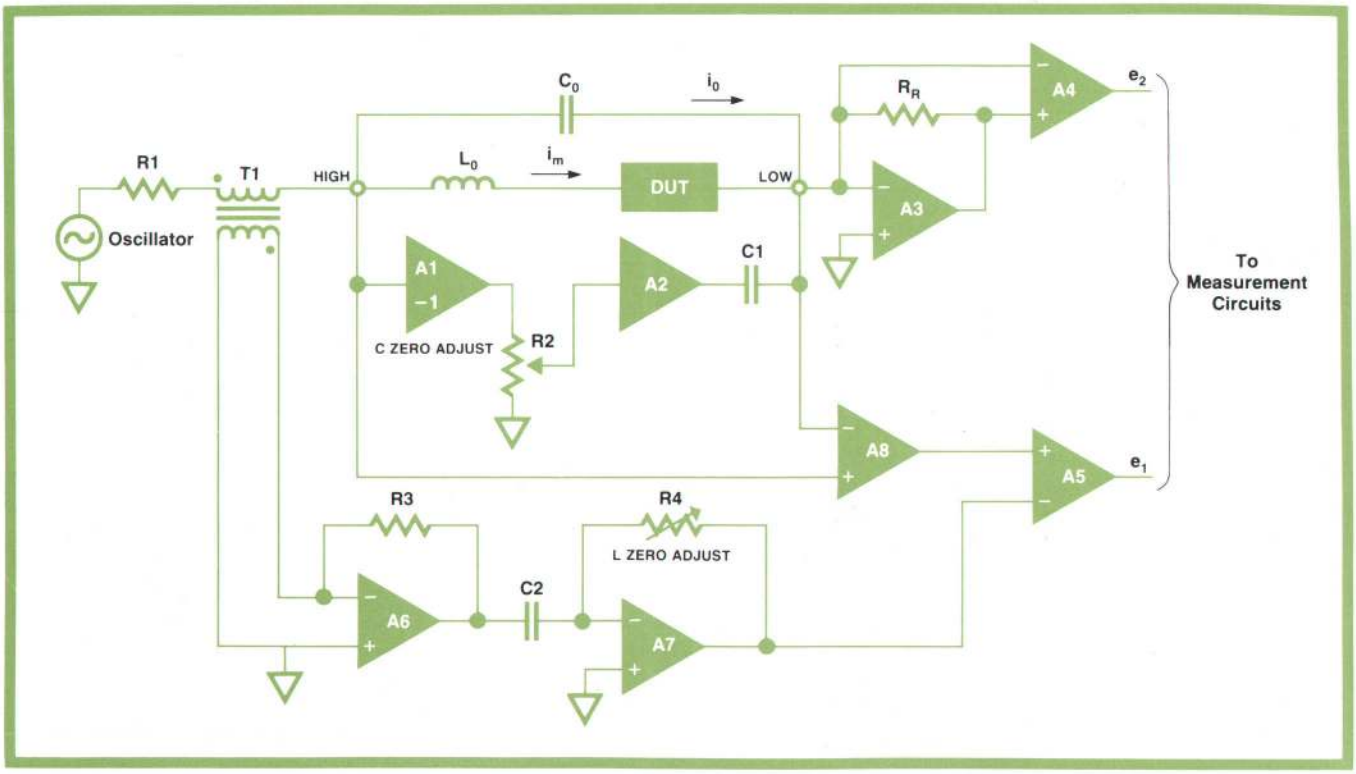


**Fig. 3.** *Compensating circuits neutralize the effect of the test fixture's stray capacitance ($C_0$) and residual inductance ($L_0$). Amplifier A1 inverts the test signal; the C ZERO ADJUST control allows adjustment of the current through C1 so it equals and thus cancels the current through $C_0$. Transformer T1 supplies a current to amplifier A6 equal to that flowing through the unknown, and the combination of C2, A7, and R4 shifts the signal 90°. R4 is adjusted so C2R3R4 = $L_0$, cancelling the effect of $L_0$ at the input to amplifier A5.*

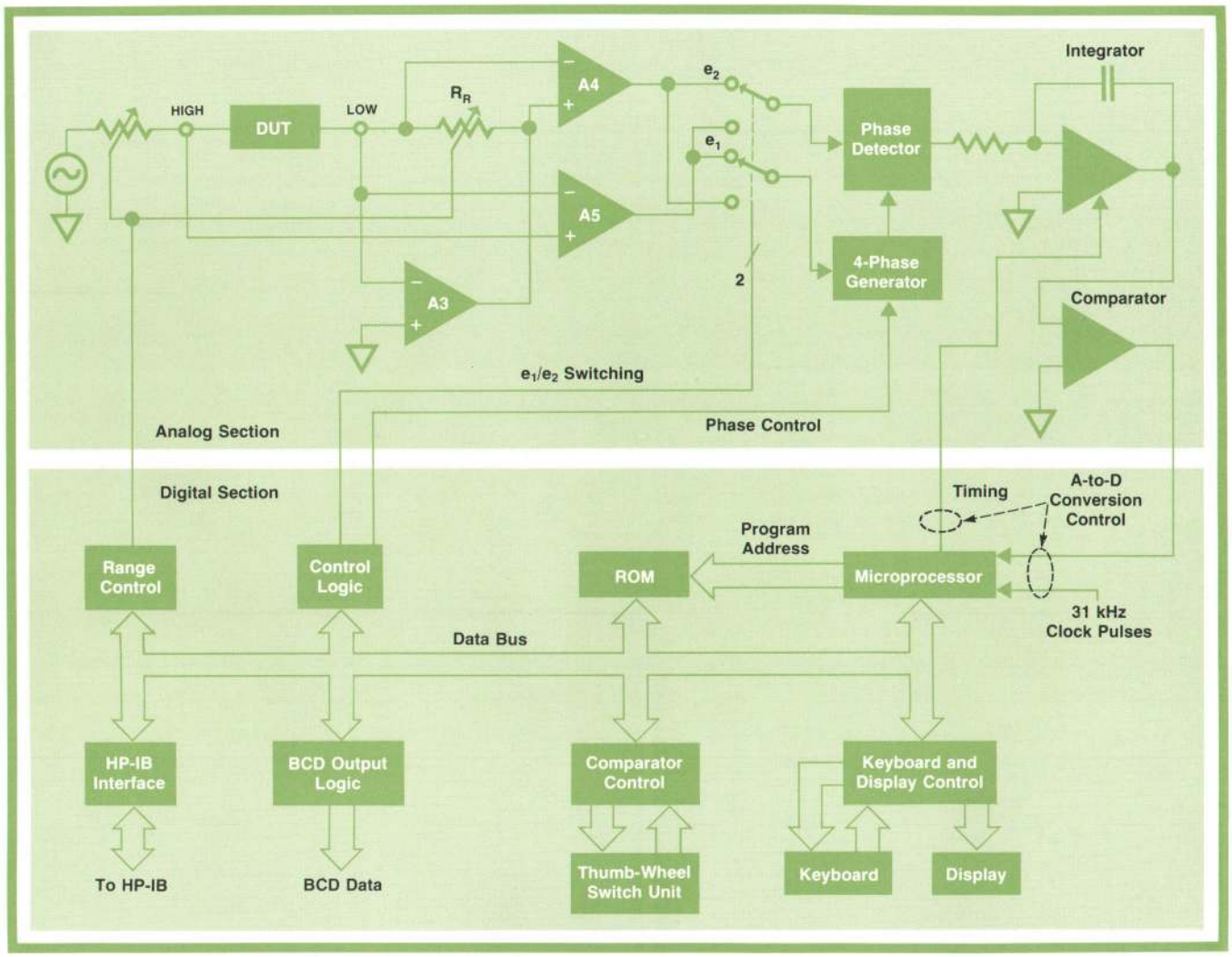


**Fig. 4.** *Simplified block diagram of the Model 4262A LCR Meter. Under control of the microprocessor, the circuits find the ratios of the real and imaginary parts of the voltage across the DUT with respect to the current (or vice versa), from which the device parameters can be derived.*

level and charges for a fixed period of time. Voltage $e_2$ is then applied to the phase detector input and it is also used as the phase reference but shifted 180° to give a negative output, which is used to discharge the integrator.

As shown in the flow chart of Fig. 5, the microprocessor determines the time of discharge by accumulating clock pulses during the discharge interval, the end of discharge being indicated by the comparator when it senses the return to the zero level. The discharge time is proportional to the quadrature part of the vector ratio $e_2/e_1$, which is proportional to the capacitance.

The counts accumulated during the discharge time are stored in a register within the microprocessor. The stored count can be used directly as the displayed quantity in a capacitance measurement because of the choice of the range resistor $R_R$ and the clock frequency (31 kHz), which eliminates the need for any computation.

Similarly, by suitable choice of $e_1$ or $e_2$ as the phase reference, and proper choice of the phase shift, time periods proportional to the other measurement quantities can be obtained.

### Digital Design

The microprocessor reads the keyboard, operates the displays, the comparator and the HP-IB option, performs the self test, and controls the many operations of the measurement cycle, such as autoranging and the A-to-D conversion. The various measurement routines, the comparator algorithm, the self-test program, and other instrument programs are stored in a 4K-byte ROM. The microprocessor is the same control-oriented type as that used in the HP Models 3455A and 3437A Digital Voltmeters.[2] It uses parallel architecture to achieve high speed but does not have a great deal of computation capability. What little

# SPECIFICATIONS
## HP Model 4262A LCR Meter

**PARAMETERS MEASURED:** C-D* or C-Q; L-D or L-Q; R/ESR.
*Loss measurement may be disabled by switch on internal PC board.

**DISPLAY:** Dual 3½ digit displays; maximum reading 1999.

**MEASUREMENT CIRCUIT MODES:** Series, parallel, auto (automatic selection of appropriate equivalent circuit mode).

**MEASUREMENT TERMINALS:** 5 terminal ($H_{CUR}$, $H_{POT}$, $L_{CUR}$, $L_{POT}$, GUARD).

**RANGE MODES:**
LCR: Autorange and manual (up-down).
DQ: Autorange and manual (step).

**MEASUREMENT FREQUENCIES:** 120 Hz (100 Hz optional), 1 kHz, and 10 kHz ±3%.

**TRIGGER:** Internal, external, or manual.

**DEVIATION MEASUREMENT:** When ΔLCR switch is depressed, measurement value is stored in memory, range is set to "Hold", and display is offset to zero. Deviation is displayed as difference between stored value and subsequent measurement data.

**OFFSET ADJUSTMENTS** (Front-panel adjustments to compensate for stray capacitance and residual inductance of test fixtures):
C: 0 to 10 pF; L: 0 to 1 μH

**SELF/TEST INDICATORS:** When SELF TEST function is selected, results of test are displayed in LCR and DQ windows. Results are indicated by PASS, FAIL 1, FAIL 2, or FAIL 3.

**DC BIAS:**
INTERNAL: 1.5 V, 2.2 V and 6 V ±5%, selectable on front panel.
EXTERNAL: Rear-panel input for external dc bias (0 to +40 V).

**ESR MEASUREMENTS:** (See Fig. 2, page 19).

**ACCURACY:** (All accuracies apply over temperature range of 23°C±5°C; at 0°C to 55°C, error doubles):

**L-D and L-Q Measurement**

| | | | | | | | | |
|---|---|---|---|---|---|---|---|---|
| Range | L | 120 (100) Hz<br>1 kHz<br>10 kHz | 1000 μH<br>100.0 μH<br>10.00 μH | 10.00 mH<br>1000 μH<br>100.0 μH | 100.0 mH<br>10.00 mH<br>1000 μH | 1000 mH<br>100.0 mH<br>10.00 mH | 10.00 H<br>1000 mH<br>100.0 mH | 100.0 H<br>10.00 H<br>1000 mH | 1000 H<br>100.0 H<br>10.00 H |
| | D | .001 - 19.9 (2 Ranges) | | | | | | |
| | Q (Note 1) | .050 - 1000 (4 Ranges) | | | | | | |
| Test Signal Level (Note 2) | Parallel | — 1 V | | | | | | |
| | Series | 40 mA | 10 mA | 1 mA | 100 μA | 10 μA | — | |
| | AUTO | Same as Series Mode | | | | Same as Parallel Mode | | |
| L Accuracy (Note 3) | Parallel | At 120 (100) Hz, 1 kHz | | | 0.3% + 2 counts | | 1% + 2 counts | |
| | | At 10 kHz | | | | | 1% + 2 counts | 5% + 2 counts |
| | Series | 0.2% + 2 counts | | | | | At 120 (100) Hz, 1 kHz | |
| | | 0.3% + 2 counts | 0.2% + 2 counts | | | | At 10 kHz | |
| | AUTO | Same as Series Mode | | | | Same as Parallel Mode | | |
| D(1/Q) Accuracy (Note 3) | Parallel | At 120 (100) Hz, 1 kHz | | | 0.3% + (3 + Lx/500) counts | | 1% + (3 + Lx/500) counts | |
| | | At 10 kHz | | | 0.5% + (3 + Lx/500) counts | | 1%+(3+ Lx/500) counts | 5%+(5+ Lx/500) counts |
| | Series | 0.2% + (3 + 200/Lx) counts | | | | | At 120 (100) Hz, 1 kHz | |
| | | 0.5% + (3 + 200/Lx) counts | | | | | At 10 kHz | |
| | AUTO | Same as Series Mode | | | | Same as Parallel Mode | | |

1. Calculated from D value as a reciprocal number.
2. Typical data, varies with value of D and number of counts.
3. ±(% of reading + counts). Lx is inductance readout in counts. Accuracies in this table apply when D <1.999.

**ACCURACY FOR LARGE D:** Typical accuracies for large D (≥ 2 on range 10.00):

| Circuit Mode | Accuracy ±(% of reading + counts) |
|---|---|
| $C_p$ Parallel | 5% + (2 + 1000/$C_x$) counts |
| $C_s$ Series | 5% + (5 + $C_x$/500) counts |
| $L_p$ Parallel | 5% + (5 + $L_x$/500) counts |
| $L_s$ Series | 5% + (3 + 200/$L_x$) counts |

$C_x$ is capacitance readout in counts.
$L_x$ is inductance readout in counts.

**C-D and C-Q Measurement**

| | | | | | | | | | | |
|---|---|---|---|---|---|---|---|---|---|---|
| Ranges | C | 120(100) Hz<br>1 kHz<br>10 kHz | 1000 pF<br>100.0 pF<br>10.00 pF | 10.00 nF<br>1000 pF<br>100.0 pF | 100.0 nF<br>10.00 nF<br>1000 pF | 1000 nF<br>100.0 nF<br>10.00 nF | 10.00 μF<br>1000 nF<br>100.0 nF | 100.0 μF<br>10.00 μF<br>1000 nF | 1000 μF<br>100.0 μF<br>10.00 μF | 10.00 mF<br>1000 μF<br>100.0 μF |
| | D | .001-19.9 (2 Ranges) | | | | | | | | |
| | Q (Note 1) | .050-1000 (4 Ranges) | | | | | | | | |
| Test Signal Level (Note 2) | Parallel | 1 V or 50 mV | | | | | — | | | |
| | Series | — | | | | 10 μA | 100 μA | 1 mA | 10 mA | 40 mA |
| | AUTO | Same as Parallel Mode | | | | | Same as Series Mode | | | |
| C Accuracy (Note 3) | Parallel | 0.2% + 1 count | | | | | (Test signal level: 1 V) | | | |
| | | 0.5% + 3 Counts | 0.3% + 2 counts | | | | (Test signal level: 50 mV) | | | |
| | Series | At 120 (100) Hz, 1 kHz | | | 0.3% + 2 counts | | | | 0.5% + 2 counts | 1% + 2 counts (Note 4) |
| | | At 10 kHz | | | | | | | 1% + 2 counts | 5% + 2 counts |
| | AUTO | Same as Parallel Mode | | | | | Same as Series Mode | | | |
| D (1/Q) Accuracy (Note 3) | Parallel | 0.2% + (2 + 200/Cx) counts | | | | | At 120 (100) Hz, 1 kHz (Test signal level: 1 V) At 10 kHz | | | |
| | | 0.5% + (2 + 200/Cx) counts | | | | | | | | |
| | | — | 0.3% + (2 + 1000/Cx) counts | | | | At 120 (100) Hz, 1 kHz (Test signal level: 50 mV) At 10 kHz | | | |
| | | — | 1.0% + (2 + 1000/Cx) counts | | | | | | | |
| | Series | At 120 (100) Hz, 1 kHz | | | 0.3% + (2 + Cx/500) counts | | | | | 1% + (5 + Cx/500) counts |
| | | At 10 kHz | | | 0.5% + (2 + Cx/500) counts | | | | 1% + (5 + Cx/500) counts | 5% + (5 + Cx/500) counts |
| | AUTO | Same as Parallel Mode | | | | | Same as Series Mode | | | |

1. Calculated from D value as a reciprocal number.
2. Typical data, varies with value of D and number of counts.
3. ±(% of reading + counts); $C_x$ is capacitance readout in counts. Accuracies in this table apply when D <1.999.
4. 5% + 2 counts at 1 kHz.

**R/ESR* Measurement**

| | | | | | | | | | |
|---|---|---|---|---|---|---|---|---|---|
| Range | 120 (100) Hz<br>1 kHz<br>10 kHz | 1000 mΩ | 10.00 Ω | 100.0 Ω | 1000 Ω | 10.00 kΩ | 100.0 kΩ | 1000 kΩ | 10.00 MΩ |
| Test Signal Level (Note 1) | Parallel | — | | | 1V | | | | |
| | Series | 40 mA | 10 mA | 1 mA | 100 μA | 10 μA | — | | |
| | AUTO | Same as Series Mode | | | | Same as Parallel Mode | | | |
| Accuracy (Note 2) | Parallel | — | | | 0.3% + 2 counts (Note 3) | | | | |
| | Series | 0.2% + 2 counts | | | | | — | | |
| | AUTO | Same as Series Mode | | | | Same as Parallel Mode | | | |

1. Typical data, varies with number of counts
2. ±(% of reading + counts)
3. ±(5% + 2 counts) on 10.00 MΩ range at 10 kHz test frequency.

*Measurement range for ESR is from 1 mΩ to 19 kΩ (typical). These values vary depending on series capacitance or inductance value of device under test. Refer to Fig. 2, page for actual ranges.

**MEASUREMENT TIME** (typical): For 1000-count measurement on low-loss component with range fixed:
1 kHz, 10 kHz: C/L, 220-260 ms. R, 120-160 ms.
120 (100) Hz: C/L, 900 ms. R, 700 ms.
When autorange is selected, the following must be added to the above:
1 kHz, 10 kHz: 45 ms/180 ms per range step.
120 (100) Hz: 150 ms/670 ms per range step.
When UNCAL lamp is lit, the faster ranging time is selected.

**READING RATE:**
INT (Internal trigger): approximately 30 ms between end of one measurement cycle and start of next.
EXT (External trigger): measurement cycle is initiated by remote trigger input.

**DIMENSIONS:** 426 W × 147 H × 345 D mm (16¾ in × 5¾ in × 13¾ in).

**WEIGHT:** approximately 8 kg (17.5 lbs).

**POWER:** 100/120/220 Vac ±10%, 240 Vac +5%-10%; 48-66 Hz, ≤55 VA with any option.

**OPTIONS:**
001: Simultaneous BCD output of LCR and DQ data. 1-2-4-8 BCD code, TTL logic level, "1" state positive. Alternate BCD output may be selected by switch on internal PC board.
004: Digital Comparator. Compares measured value with high and low limit switch settings for both LCR and DQ and provides High, In, Low comparison outputs. Cannot be used with Option 101. Comparison outputs: visual, relay contact closure and TTL level output.
010: 100-Hz Test Frequency instead of 120 Hz.
101: HP-IB data output and remote control.

**PRICES IN U.S.A.:** Model 4262A, $2335. Opt. 001, $240. Opt. 004, $580. Opt. 010, no charge. Opt. 101, $395.

**MANUFACTURING DIVISION:** YOKOGAWA-HEWLETT-PACKARD LTD.
9-1, Takakura-cho
Hachioji-shi
Tokyo, 192 Japan

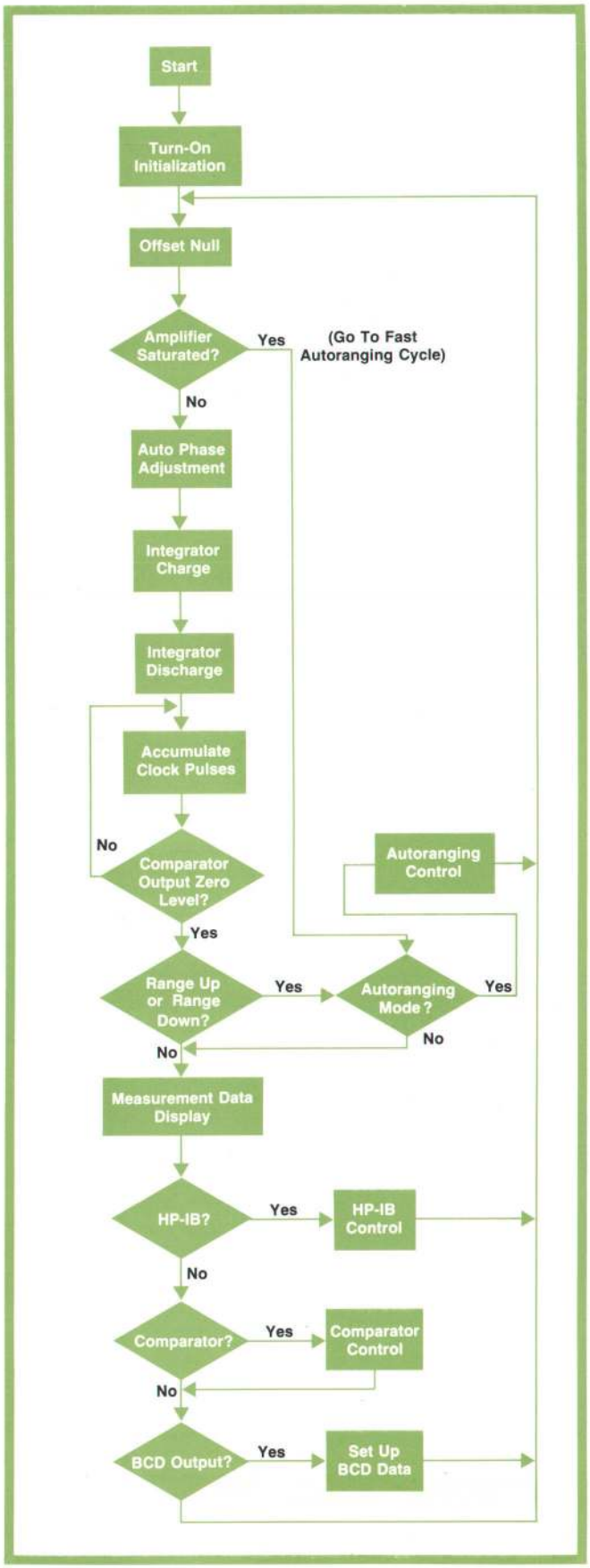


**Fig. 5.** *Flow chart of measurement routine.*

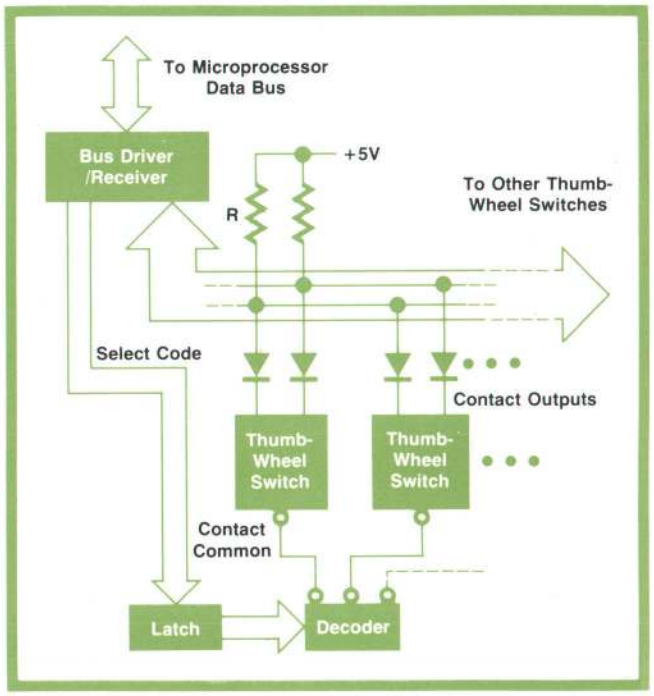


**Fig. 6.** *Comparator option requires little hardware because of the capabilities provided by the microprocessor.*

arithmetic there is to be done is accomplished mostly by incrementing or decrementing counts stored in registers.

The manner in which this microprocessor system enables operating features to be added at little cost is illustrated by the comparator option, diagrammed in Fig. 6. Each digit of each thumbwheel connects to one of the ten lines of the comparator data bus by means of a diode. The diode cathodes for each switch are tied in common to the switch contact. When the front-panel COMPARATOR ENABLE key is pressed, the microprocessor initiates a stored program that sequentially grounds the common contacts of the thumbwheels, and for each one senses which line of the data bus is grounded. The comparator settings can thus be stored for use during subsequent measurement comparisons. This technique minimizes the amount of hardware needed to implement the comparator function.

**Acknowledgments**

Special thanks are due to Hiroshi Sakayori, who evaluated the 10-kHz C standard, Shigeo Kamiya for much help, and Dave Okuyama, who developed the microcomputer cross-assembler to be run on an HP 2100 Computer. Yoshimasa Shibata contributed to the mechanical design, and industrial design was done by Kazunori Shibata. Thanks are due R and D group manager Shiro Kito and marketing manager Shigeki Mori who provided significant suggestions and encouragement throughout the project.

**Fig. 7.** *Model 4262A LCR Meter, shown here without options, has a front panel arrangement that facilitates manual control when manual control is preferred to automatic operation. With the HP-IB option installed, all pushbutton functions are programmable through the HP interface bus (all options are field installable).*

## References


1. S. Hashimoto and T. Tamamura, "An Automatic Wide-Range Digital LCR Meter," Hewlett-Packard Journal, September 1976.
2. A. Gookin, "A Fast-Reading, High-Resolution Voltmeter that Calibrates Itself Automatically;" J.E. McDermid, J.B. Vyduna, and J.M. Gorin, "A High-Speed System Voltmeter for Time-Related Measurements," Hewlett-Packard Journal, February 1977.

**Masahiro Yokokawa**

Masahiro Yokokawa earned a BSEE degree from Nagoya University in 1971 and worked on the hardware design of computer peripherals before joining Yokogawa-Hewlett-Packard in 1973. After developing an HP-IB coupler for LCR meters, Masahiro became project leader for Model 4262A, contributing the digital design. In his spare time he enjoys swimming and traveling and he likes to listen to jazz.

**Keiki Kanafuji**

Keiki Kanafuji joined Yokogawa-Hewlett-Packard in 1972 shortly after obtaining a BSEE degree from the Tokyo Institute of Technology. Initially he worked on some investigative projects then contributed to the design of the Model 4272A Preset C Meter before undertaking the design of the analog circuitry in Model 4262A. Outside of working hours, Keiki relaxes by playing contract bridge and listening to music.


Hewlett-Packard Company, 1501 Page Mill Road, Palo Alto, California 94304

HEWLETT-PACKARD JOURNAL

**DECEMBER 1977** Volume 29 • Number 4

**Technical information from the Laboratories of Hewlett-Packard Company**

Hewlett-Packard Central Mailing Department
Van Heuven Goedhartlaan 121
Amstelveen-1134 The Netherlands
Yokogawa-Hewlett-Packard Ltd., Shibuya-Ku
Tokyo 151 Japan

**Editorial Director • Howard L. Roberts**
**Managing Editor • Richard P. Dolan**
**Art Director, Photographer • Arvid A. Danielson**
**Illustrator • Susan E. Wright**
**Administrative Services, Typography • Anne S. LoPresti**
**European Production Manager • Dick Leeksma**

Bulk Rate
U.S. Postage
Paid
Hewlett-Packard
Company



32503920TH157HARRAAA 134

MR JULIAN A HARRIS JR
CHAYO ELECTRONICS LTD
COMMUNICATIONS DEPT
1575 NO 20TH AVE
PENSACOLA FL 32503



CHANGE OF ADDRESS: To change your address or delete your name from our mailing list please send us your old address label (it peels off). Send changes to Hewlett-Packard Journal, 1501 Page Mill Road, Palo Alto, California 94304 U.S.A. Allow 60 days.