5.56mm
Enfield Weapon System
User Handbook

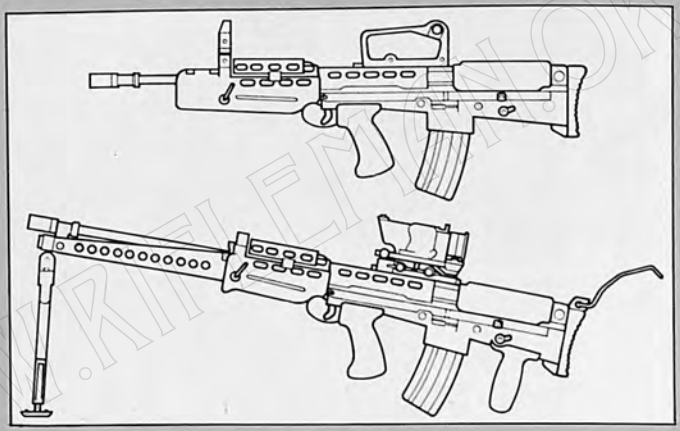

ROYALORDNANCE
Defence systems, sub-systems and components

Issue 1 Oct 86

WWW.RIFLEMAN.ORG.UK

WWW.RIFLEMAN.ORG.UK

CONTENTS

	Pages
TECHNICAL DATA	2-3
INTRODUCTION	4-5
ASSEMBLIES	6-7
ACCESSORIES AND SPARES	8-17
OPERATION, SIGHTS AND HANDLING	19-39
STRIPPING AND ASSEMBLING	41-53
CLEANING	54-56
SETTINGS AND ADJUSTMENTS	57-61
FUNCTIONAL FAILURES	62-64

This document is of UK origin and is copyright © Royal Ordnance plc 1985. It contains proprietary information which is disclosed for information purposes only.

WWW.RIFLEMAN.ORG.UK

TECHNICAL DATA

	IW	LSW
Ammunition		
Calibre (mm)	5.56	
Types	Ball Tracer Blank Low Power Training	
Round Weight (g)	12	
Mechanical Features		
Firing Modes	Single Shot and Auto	
Methods of Operation	Gas and Spring	
Locking	Rotary Bolt, Forward Locking	
Feed	Magazine (30 rounds)	
Firing Characteristics		
Muzzle Velocity (m/s)	940	970
Recoil (joules)	4	
Number of Barrel Grooves	4	
Pitch of Rifling (mm)	1 Turn in 175	
Twist of Rifling	Right Hand	

WWW.RIFLEMAN.ORG.UK

TECHNICAL DATA

	IW	LSW
Sighting		
Optical Sight (SUSAT)	Sight Unit Small Arms Trilux	
Magnification	X4	
Field of View (mils)	177	
Eye Relief (mm)	24	
Range Settings (metres)	300 to 800	
Iron Sight		
Foresight	Post	
Backsight	Twin Aperture	
Sight Radius (mm)	290 to 320	
Range (metres)	Up to 300	
Weights (kg)		
Weights (SUSAT and Full Magazine)	5.08	6.88
Weapon only	3.8	5.6
Magazine with 30 rounds	0.48	
Magazine empty	0.12	
SUSAT	0.8	
Iron Sight	0.3	
Bayonet and Scabbard	0.3	
Lengths (mm)		
Weapon	780	900
Bayonet	300	
IW with Bayonet Fixed	980	

WWW.RIFLEMAN.CO.UK

FIGURE 1 — THE ENFIELD WEAPON SYSTEM

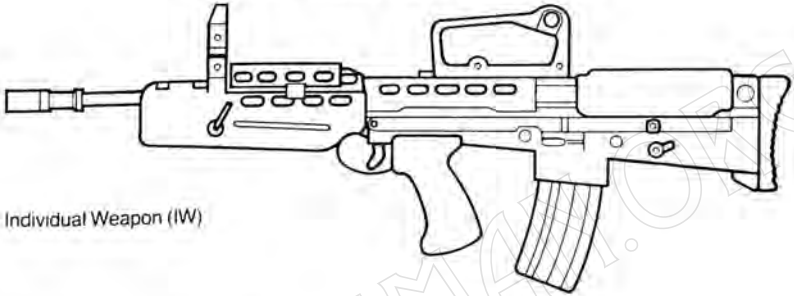

Individual Weapon (IW)

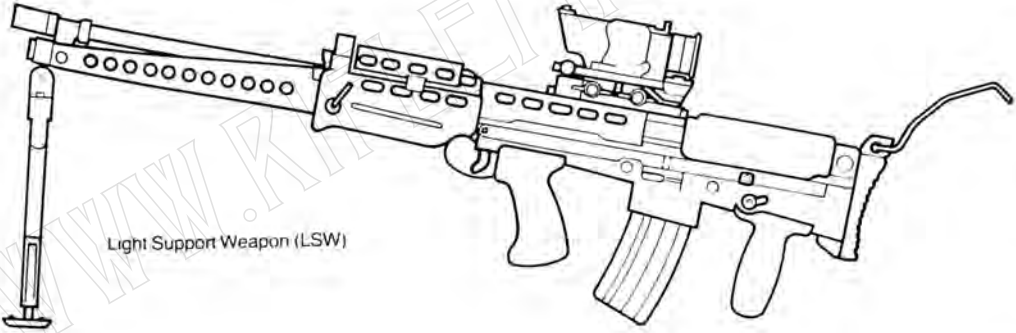

Light Support Weapon (LSW)

WWW.RIFLEMAN.ORG.UK

INTRODUCTION

The 5.56mm Enfield Weapon System comprises the Individual Weapon (IW) and the Light Support Weapon (LSW). Both the IW and the LSW have the same basic components and therefore most are interchangeable. The LSW differs from the IW in having a longer barrel, an outrigger with a bipod, a smaller front handguard, a small rear handgrip on the butt and a shoulder strap. (Fig. 1).

Both weapons use a short stroke gas system and a rotary forward-locking breech mechanism to give single shot or automatic operation from a 30 round magazine. The 22 mm diameter flash eliminator enables the firing of rifle grenades from IW only.

Various sighting systems may be used including a fully optical SUSAT (Sight Unit Small Arms Trilux) sighting system; or an Iron Sight, comprising a foresight and a backsight incorporated in a carrying handle. The dovetail top sight mounting will also accept mountings of a variety of night sights.

The details in this handbook relate to both the IW and the LSW, unless stated otherwise.

WWW.RIFLEMANOK.UK

FIGURE 2 — THE WEAPON STRIPPED

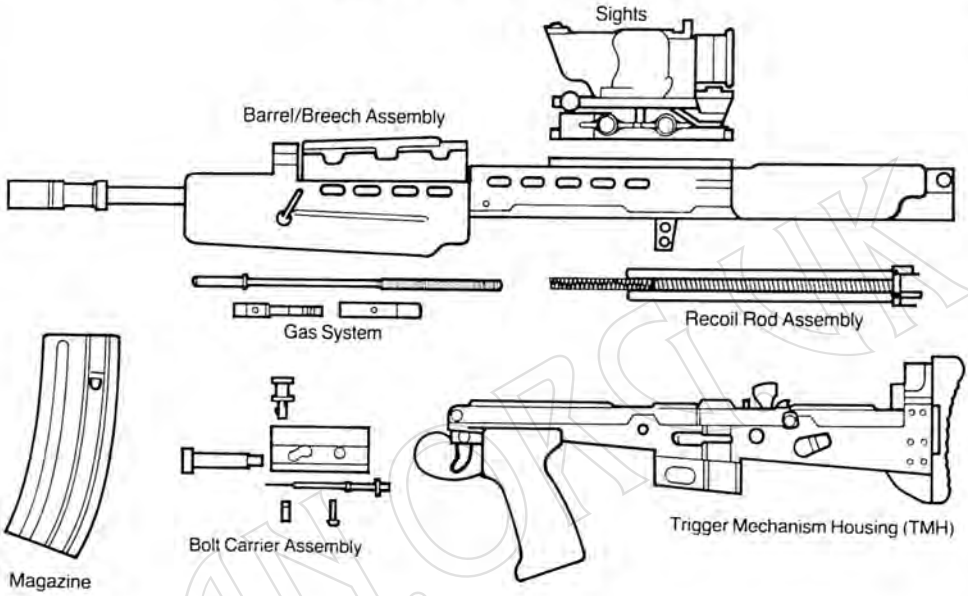

ASSEMBLIES

The basic weapon can be stripped down to seven major assemblies. (Fig. 2)

Magazine
Sights
Trigger Mechanism Housing (TMH)
Barrel — Breech Assembly
Gas System
Bolt Carrier Assembly
Recoil Rod Assembly

Further stripping of some assemblies is possible and in some cases may be necessary for cleaning or replacing parts.

FIGURE 3 — THE SLING

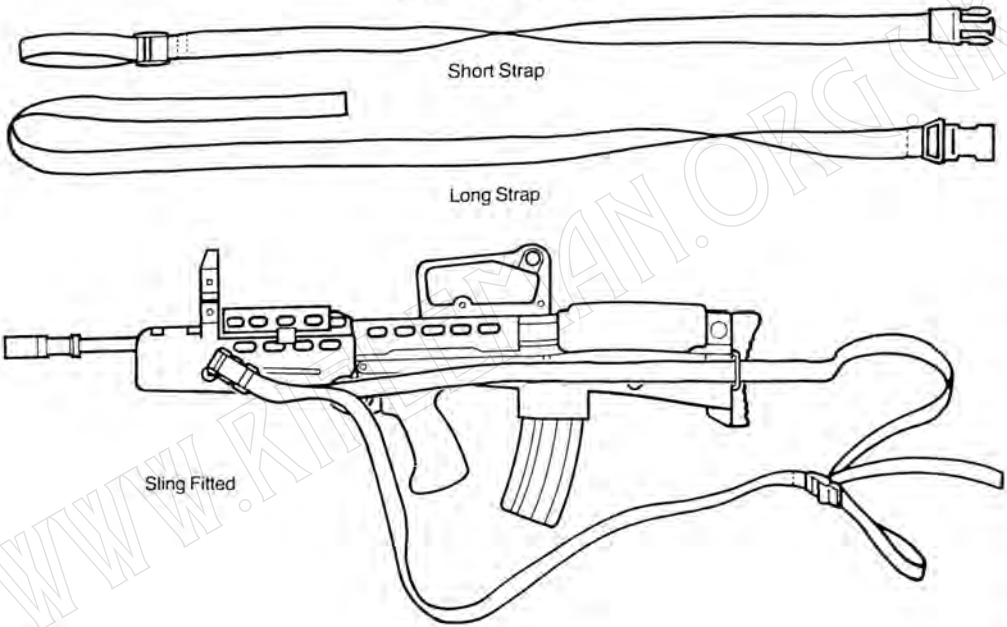

WWW.RIFLEMAN.ORG.UK

ACCESSORIES AND SPARES

Accessories (Figs. 3, 6, 7, 21)

These are additional items which are not necessarily essential to fire the weapons.

Sling
Bayonet and Scabbard
Blank Firing Attachment
Tool Roll and Spare Parts

Spares

A complete Bolt Carrier Assembly, including firing pin, may be included in the tool roll.

WWW.RIFLEMAN.ORG.UK

FIGURE 4 — FITTING THE SLING

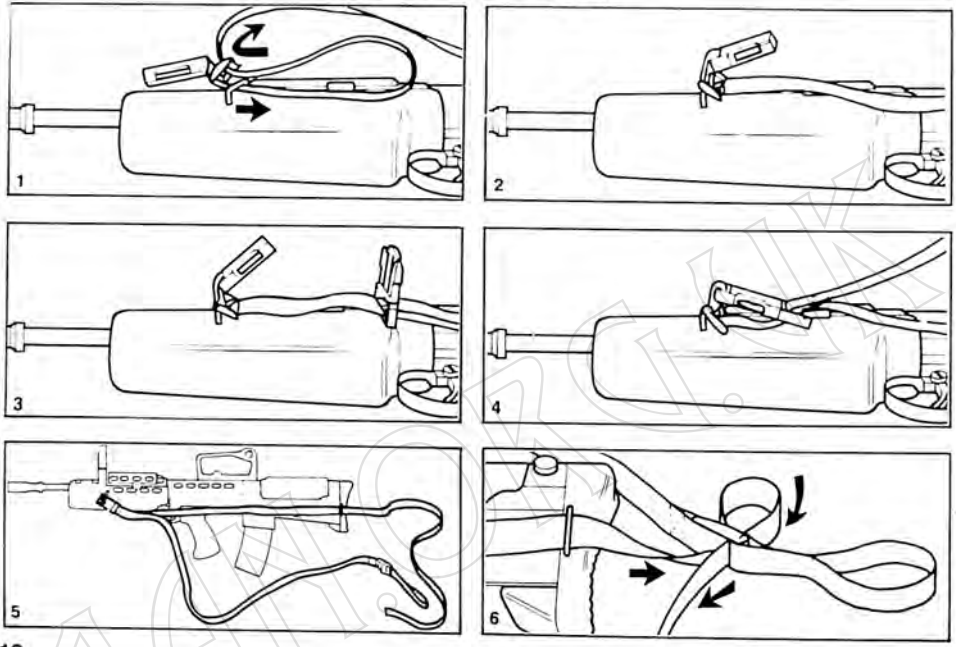

The Sling (Fig. 3)

The sling consists of two lengths of webbing type material. The first longer piece has, at one end female part of a clip and a flat plastic loop attached, the other end of the strap is clear. The seco shorter piece has the male part of the clip at one end, and a quick-release buckle and loop at the other

Fitting (Fig. 4)

1. Take the longer strap and lay it flat along the weapon, with the female clip end towards t muzzle and the flat plastic loop pointing outwards. Feed the clear end through the front sl loop and then through the flat plastic loop on the strap. Pull tight.

2. Take the shorter strap and, holding it parallel with the first strap and with the male clip e pointing outwards, feed the clear end of the longer strap through and over the ridged edge the gate in the base of the male clip on the short strap, connect the male and female parts of clip together.

3. Ensure that the longer strap remains untwisted, then feed the clear end through the r slingloop on the weapon.

4. Check that the shorter strap is not twisted, then feed the clear end of the longer strap outwa through the main gate of the buckle bar.

5. Finally, thread the clear end of the longer strap through the gate in the buckle.

FIGURE 5 — CARRIAGE

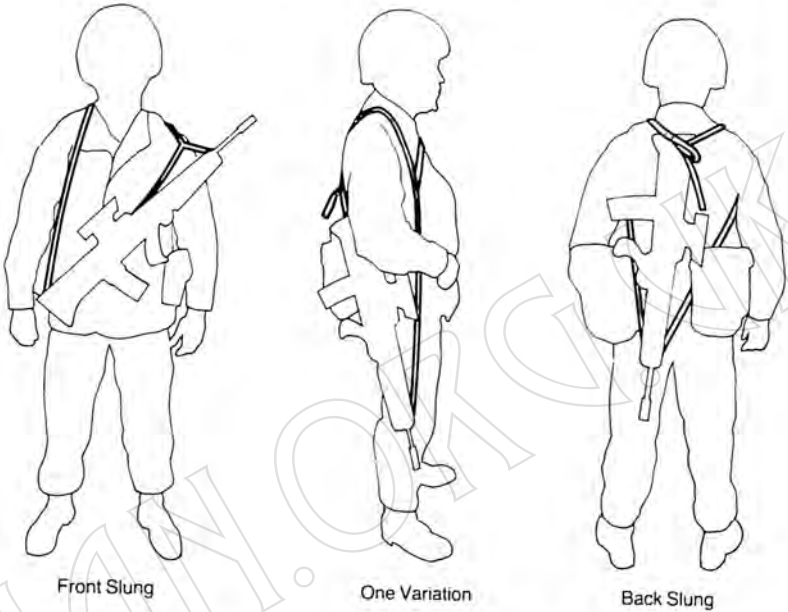

Removal

Reverse the fitting procedure.

Uses (Fig. 5)

The sling can be used in two ways, other variations may be possible.

Front Slung

Separate the two straps and insert the head, right arm and shoulder through the loop formed. The weapon will now be suspended from the left shoulder and across the chest. Adjust position by pulling down on the clear end of the longer strap. Pulling the quick release loop or releasing the clip will allow the weapon to be used in any aiming position.

Back Slung

Separate the sling to form two loops. Put an arm through each loop to position the weapon, muzzle down, in the centre of the back.

FIGURE 6 — THE BAYONET

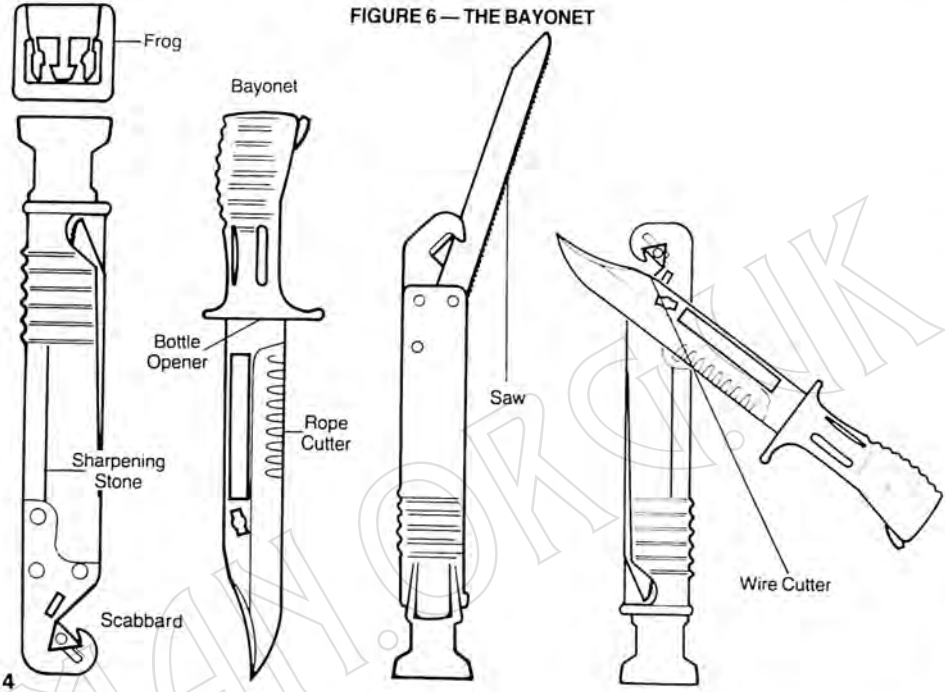

Bayonet

The bayonet is shaped to provide good thrust penetration. It has a cutting edge, blade channels and a ribbed portion for rope cutting. A slot at the forward end is for use with the scabbard when used as a wire cutter. The handle is shaped to enable the bayonet to be used as a fighting knife; at the rear of the handle is a release catch which holds it onto the muzzle of the weapon. The blade end of the handle can be used as a bottle opener.

Scabbard (Fig. 6)

The scabbard is normally carried on the belt, attached by a frog or to a side of an ammunition pouch. Quick release catches are embodied. Besides providing stowage for the bayonet, the scabbard provides:

Saw Blade This unfolds from one edge of the scabbard and is for use on wood NOT metal.

Sharpening Stone Integral with the opposite side of the scabbard. Use with light oil.

Wire Cutters Engage the lug of the scabbard with the slot in the bayonet, ensuring that the sharp edge of the bayonet faces away from the hook end of the scabbard. The wedge shape on the back of the blade together with a corresponding hardened insert of the scabbard hook forms an effective wire-cutting device.

FIGURE 7 — THE BLANK FIRING ATTACHMENT (BFA)

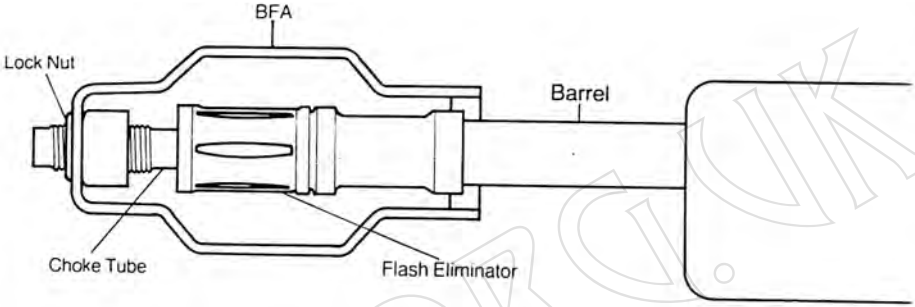

Blank Firing Attachment (Fig. 7)

This attachment should be fitted when the weapons are to be used for firing blank ammunition. No other accessory is required.

Fitting

1. Unscrew the choke tube as far out as necessary to allow the attachment body to be manipulated over the flash eliminator. The rear of the attachment body sits on the barrel immediately behind the flash eliminator.

2. Screw in the choke tube by hand until it butts up to the muzzle. Using the combination too inserted into the slot of the choke tube, rotate the tube a further 180 degrees or one half turn then tighten the lock nut.

3. The reason for this 180 degrees turn when tightening the choke tube, is to stretch the attachment body to ensure that sufficient force is applied to the choke tube/muzzle interface to prevent gas leakage. If there is a gas leakage, then the weapon will suffer short recoils However, no safety hazard will be associated with incorrect fitting.

Tool Roll

A description of the Tool Roll is given under CLEANING.

MANORG.UK

OPERATION, SIGHTS AND HANDLING

SAFETY PRECAUTIONS

Before handling the weapon it is essential that the following safety precautions be observed.

NEVER point the weapon in a direction where a negligent firing could cause injury personnel. Assume the weapon is loaded until proved otherwise.

ALWAYS keep the safety catch to safe 'S' until firing is intended.

ALWAYS put the safety catch to safe 'S' the change lever to repetition 'R' and then remove t magazine BEFORE cocking during unloading.

The trilux lamp used in the SUSAT contains tritium gas. In the event of breakage the followi precautions are to be taken:

1. The escaping gas is not to be inhaled.
2. If smoking, all cigarettes are to be extinguished.
3. Broken parts are not to be handled with bare hands.
4. If a breakage occurs indoors, doors and windows are to be opened to allow the gas to clear a any gas or flame heating system is to be turned off.

FIGURE 8A — BASIC MECHANISM OPERATION

1

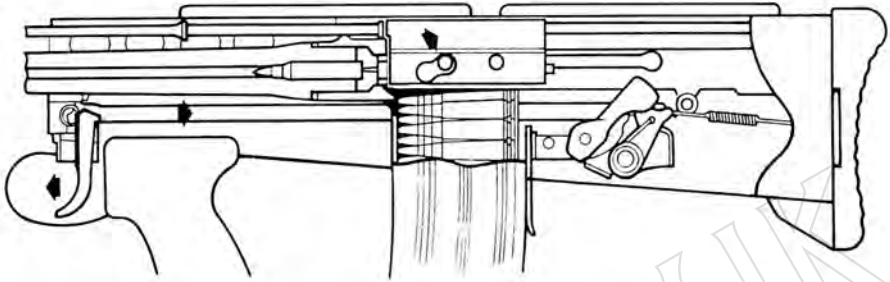

2

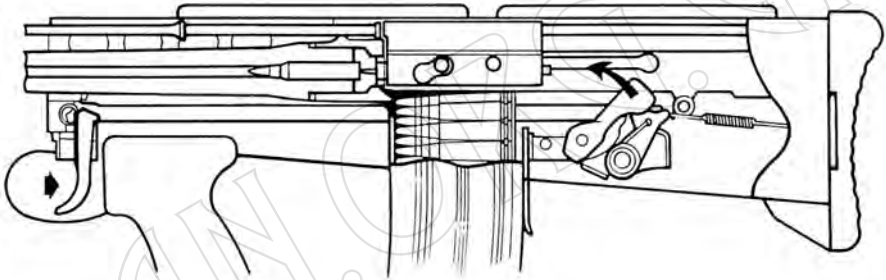

BASIC MECHANISM OPERATION (Fig. 8A, 8B)

The operation of the basic mechanism is the same for both the IW and LSW.

Change Lever at Repetition (R)

1. When the safety catch is at 'S' the trigger cannot be fully operated.

2. When the safety catch is at 'F' and the trigger is pressed, the hammer is released and hits the rear of the firing pin, driving it forward on to the cap in the base of the round. The round is fired and gases are produced which drive the bullet up the barrel.

3. Some of this gas enters the gas block and is diverted by the gas plug into the gas cylinder, driving the piston and spring to the rear.

4. The rear of the piston strikes the carrier, forcing it backwards. The compressed piston spring re-asserts itself and forces the piston forward again.

5. The bolt is unlocked by the rearward movement of the carrier forcing the cam stud down the cam stud slot.

6. The carrier and bolt go back together, cocking the hammer as they go. The empty case is withdrawn from the chamber by the extractor and ejected out of the weapon to the right. The return spring on the guide rod is also compressed at this stage. Rearward movement of the carrier and bolt ceases when the rear of the carrier strikes the buffer.

FIGURE 8B — BASIC MECHANISM OPERATION

3

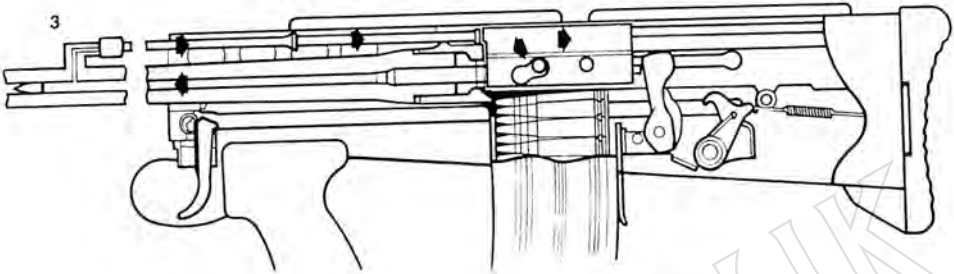

4

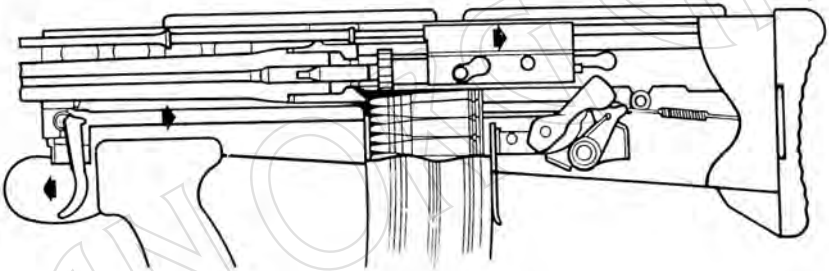

7. The return spring re-asserts itself and, aided by the buffer, drives the carrier and bolt forward. As it does so, the bolt feeds the next round out of the magazine and into the chamber. The extractor grips the round and the ejector is compressed. The bolt is rotated to lock into the barrel extension by the continuing forward movement of the carrier forcing the cam stud to slide up the cam slot. It is not before the parts are fully forward and locked that the safety sear can operate to free the hammer into its ready position. A distinct click will be heard.

8. The weapon is now ready to fire again. This action will continue each time the trigger is operated until the last round has been fired and rearward action takes place. The working parts will then be held to the rear by the holding open catch being lifted up by the magazine platform.

Change Lever at Automatic (A)

The basic mechanism as previously explained applies equally to the automatic role. The difference being that the weapon will continue to fire as long as the trigger is kept pressed and there are rounds left in the magazine. The safety sear allows one shot only per trigger operation with the change lever at 'R. With the change lever at 'A' the safety sear is held out of its working position and automatic fire results.

FIGURE 9 — THE SUSAT SIGHT

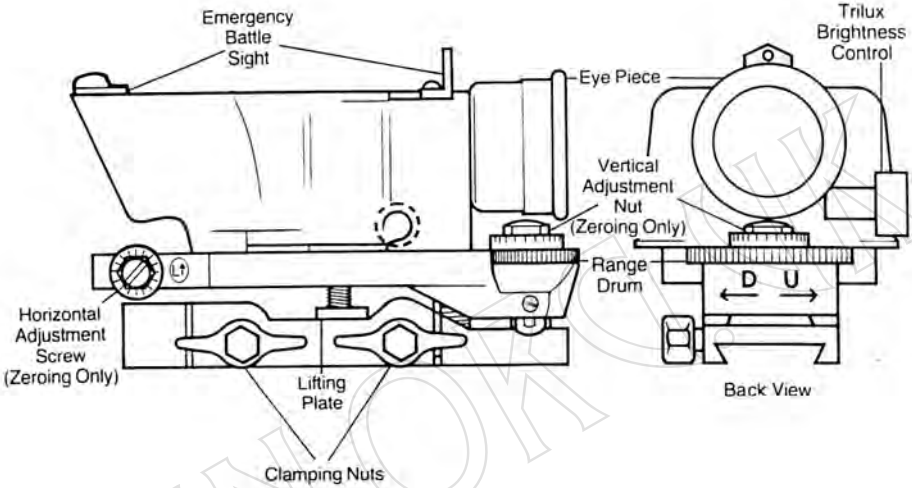

SIGHTS (Fig. 9)

The weapon may be fitted with one of two types of day sight, either the Sight Unit Small Arms Trilux (SUSAT) or an Iron Sight.

SUSAT Sight

The SUSAT consists of an optical body fixed to a mounting bracket. On the top of the optical body is the Emergency Battle Sight (EBS).

The Optical Body contains the optical system which has a magnification factor of x 4 and a field of view of 177 mils. The body comprises:

The Eyepiece which is made of rubber and is glued to the rear of the optics. It is designed to protect the lens from water and of a length to ensure correct positioning of the eye.

The Pointer which is located within the optics and is seen by the firer in his field of view. In daylight the pointer appears as a dark pillar with a clear centre, at night the pointer tip can be illuminated by the TRILUX lamp. The light from the lamp is reflected up into the pointer and is seen as a reddish glow. A Brightness Control is located on the right rear of the body and can be rotated to **change** the light intensity from zero to full brightness.

The Objective Lens Hood is part of the body which is shaped to overhang the front of the objective lens, so reducing reflections and also protecting the lens from rain.

The EBS consists of a blade foresight and an aperture backsight, matched to the optical centre of the SUSAT lenses during manufacture and therefore no zeroing adjustment is provided. It is for use in an emergency should the SUSAT become damaged, until such time that the Iron Sight can be fitted in its place.

The Mounting Bracket comprises a mounting shoe and a sight mount. The mounting shoe is dovetailed to match the sight base on the weapon. A locating plunger protrudes through the shoe to engage in one of three holes in the sight base. Two clamping units secure the shoe to the sight base. A lifting plate for the plunger protrudes on the right side of the bracket. This enables the fore/aft position of the sight to be adjusted to suit the individual. The sight mount links the mounting shoe with the optical body. For zeroing purposes, the mount is fitted at the front with a horizontal adjustment screw, at the rear is a vertical adjustment screw and immediately below the eyepiece is a range drum marked from 3-8 in increments of 100 metres.

MAN.ORG.UK

Fitting the SUSAT (Fig. 10)

1. Check that the serial number on the sight is correct for the particular weapon.

2. Rotate the range drum so that the 300 metre setting faces directly to the rear. Release the sight clamping nuts and open the weapon top cover.

3. Hold the weapon with the right hand and grip the SUSAT with the left hand.

4. Using the forefinger to raise the lifting plate and withdraw the locating plunger, align the rear of the mounting shoe with the front of the sight base then slide the sight towards the rear of the weapon until the required position is reached, then release the lifting plate.

5. Check that the locating plunger has engaged in the correct recess in the sight base, test by attempting to move the sight forwards or backwards, then tighten the clamping nuts. (DO NOT OVERTIGHTEN). Close the weapon top cover.

6. For sight adjustments, refer to SETTINGS AND ADJUSTMENTS.

FIGURE 10 — FITTING/REMOVING SUSAT SIGHT

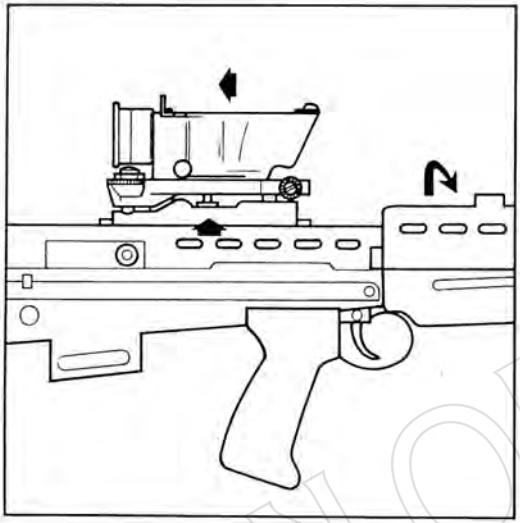

Sighting View

MAN.OR.UK

Removing the SUSAT

1. Note the position of the lifting plate in relation to the sight base. (For use when refitting the sight.)

2. Hold the weapon by the pistol grip with the right hand so that it is horizontal and upright. Open the top cover and undo the sight clamping nuts.

3. Grip the SUSAT with the left hand, use the forefinger to raise the lifting plate and disengage the locating lug from the sight base, then slide the SUSAT forward and off the sight base. Close the top cover of the weapon.

FIGURE 11 — THE IRON SIGHT

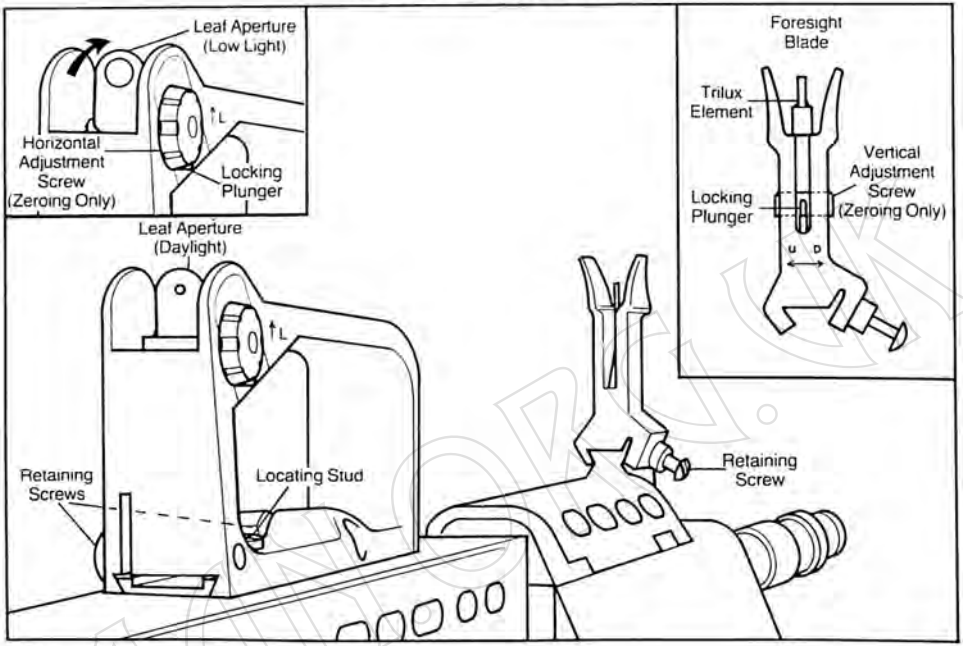

The Iron Sight (Fig. 11)

The Iron Sight consists of a foresight block and a carrying handle which incorporates a dual leaf aperture backsight.

The Foresight consists of a blade mounted in a foresight block, the base of which contains a female dovetail which fits into a matching male dovetail on the top of the weapon gas block. The two are held together by a retaining screw. The foresight blade is protected by extensions of the block and the rear of the blade houses a TRILUX element which emits light through a small hole.

A vertical adjustment screw, retained by a locking plunger, provides for zeroing adjustment.

The Backsight and Carrying Handle is fitted to the sight base by means of matching dovetails. The handle is positioned by a locating screw which engages in one of three holes in the sight base, and is secured by two retaining screws. The backsight has two leaf apertures, a small one for ranges up to 200m and a larger one for use (in conjunction with the TRILUX element) in conditions of low light or darkness. Extensions on the handle protect the apertures. A horizontal adjusting screw on the right side, retained by a locking plunger, is used for zeroing.

FIGURE 12 — FITTING/REMOVING THE IRON SIGHT

Sighting View

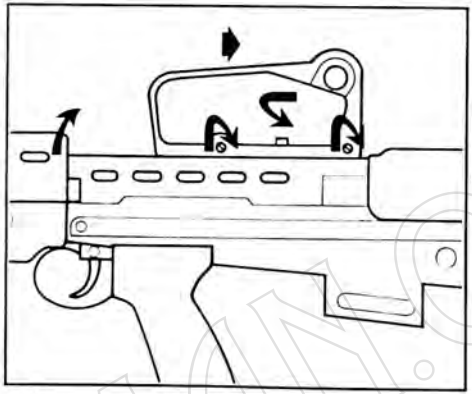

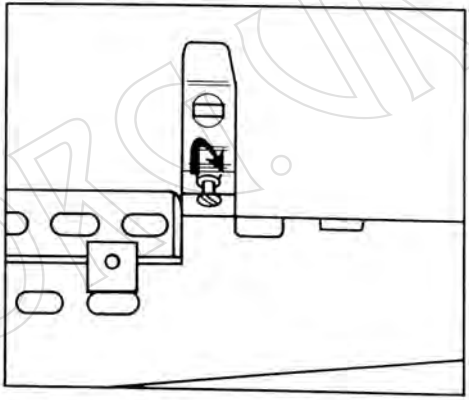

MANOR.UK

Fitting the Iron Sight (Fig. 12)

1. Loosen the foresight retaining screw fully, using the combination tool.

2. Ensure the TRILUX element is facing to the rear, mate the dovetail joints, check that the sight is flush front and rear then tighten the retaining screw (DO NOT OVERTIGHTEN).

3. Using the combination tool, loosen the carrying handle retaining screws and release the locating screw sufficiently for the handle to slide easily along the sight base dovetail.

4. Open the weapon top cover and slide the handle rear-wards on to the sight base to the required position, ensuring the locating screw aligns with one of the three holes in the sight base. Tighten the locating screw and retaining screws. (DO NOT OVERTIGHTEN.) Close the weapon top cover.

5. When an Iron Sight has been fitted as a replacement for the SUSAT sight, then the weapon must be zeroed. (Refer to SETTINGS AND ADJUSTMENTS.)

Removing the Iron Sight

1. Fully release the foresight block retaining screw and slide the block off the dovetail. Tighten the retaining screw.

2. Open the weapon top cover, loosen the retaining screws and the locating screw on the carrying handle, then slide the handle forwards clear of the sight base. Close the weapon top cover.

FIGURE 13 — WEAPON CONTROLS

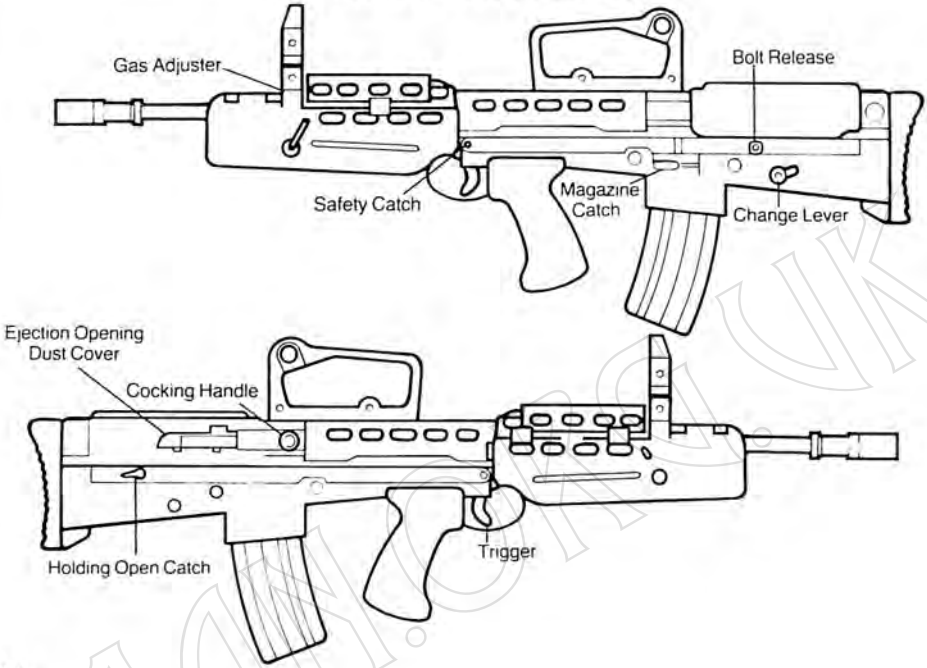

HANDLING

Controls (Fig. 13)

The figure illustrates the positions of the weapon controls.

Filling Magazines (Fig. 14)

Each magazine will hold 30 rounds of 5.56 rimless ammunition. There are two methods of filling magazines, one using a charger and the other without. The charger can only be used if the ammunition is issued in clips. Before filling any magazine ensure it is not damaged particularly in the area of the magazine lips.

Using the Charger

1. Grip the magazine in the left hand support on a firm surface, ensure that the back of the magazine is facing away from the body.

2. Fit the wide end of the charger onto the back of the magazine and ensure it is fully seated.

3. Place a clip of 10 rounds into the charger.

4. Using the right thumb, push down on the top round until all rounds are fed into the magazine. Remove the clip.

5. Each time a clip is fed, ensure that the base of the last round is firm against the rear wall of the magazine. When the magazine is full remove the charger.

FIGURE 14 — FILLING/EMPTYING THE MAGAZINE

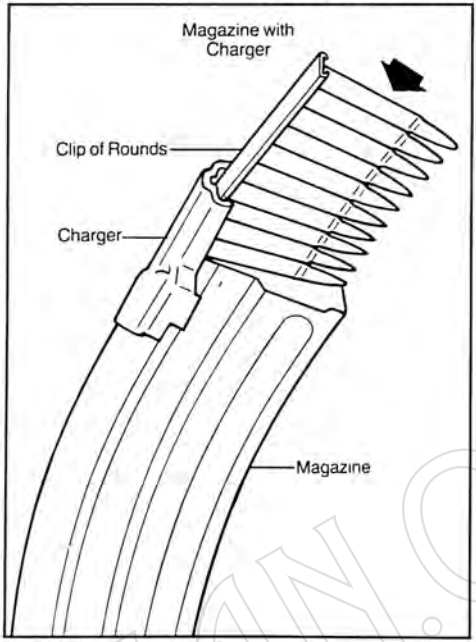

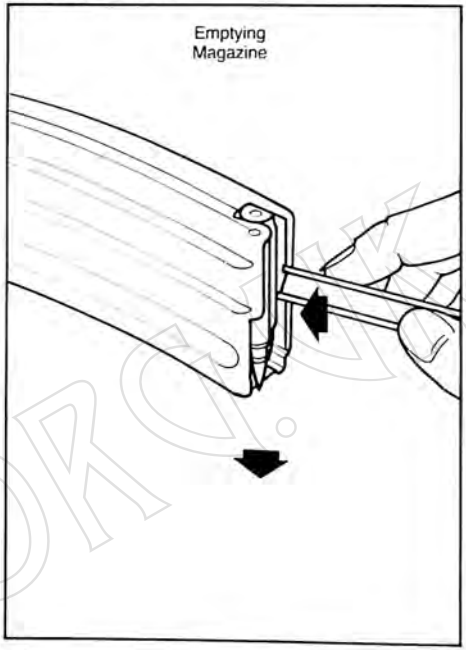

Filling with Loose Rounds

1. Hold the magazine as when using a charger.

2. Push each round into the magazine, bullets towards the narrow wall of the magazine. Ensure that the base of each round is firm against the magazine rear wall.

Emptying Magazines (Fig. 14)

Using an empty clip, press down on each second round to allow the top round to drop out. Ensure that the rounds are collected in a suitable receptacle and not allowed to fall into the dirt.

A second method is to hold the magazine, bullets pointing away from the body, then push the base of each round forward until it disengages from the guide clips.

Sight Setting

SUSAT (Fig. 9)

The range drum is graduated in units of 100, from 300 to 800 metres. To set a range, turn the drum until the required figure is facing straight to the rear. The 'battle range' of 300 metres should be used for normal infantry work.

Iron Sight (Fig. 11)

There are two apertures, a small one for normal use and a larger one for use in poor visibility or at night. To select aperture, push the leaf forwards or backwards.

Load, Ready and Unload

The weapon is loaded when a magazine is inserted. It is ready to fire when it has been cocked and a live round is in the chamber. It is unloaded when the magazine has been removed and there is no round in the chamber.

Load

1. Set the safety catch to 'S' (safe).

2. Set the change lever to 'R' (repetition).

3. Tilt the weapon to the right and insert a full magazine. Ensure the magazine is clicked fully home in the weapon housing.

Ready

With the weapon loaded

1. Check that the change lever is at 'R'.

2. Pull the cocking handle fully to the rear, then release forward. Do not assist the lever forward or a stoppage may occur.

3. Set the safety catch to 'F' (fire) and place the finger on the trigger.

MAN.ORG.UK

Unload

1. Reposition the finger outside the trigger guard, set the safety catch to 'S'.

2. Check that the change lever is at 'R'.

3. Grip the magazine, press the release catch and remove the magazine. THIS MUST BE DONE BEFORE CONTINUING.

4. Point the weapon in a safe direction, cock the weapon carefully, to prevent the round ejecting too far, and engage the holding open catch. Tilt the weapon and visually check that the body and chamber are clear, then operate the bolt release to allow the working parts to go forward. At night, check the body and chamber are clear by inserting a finger.

5. Put the safety catch to 'F', operate the trigger then return the safety catch to 'S' and close the dust cover.

MANORG.UK

STRIPPING AND ASSEMBLING

General

In order to maintain the weapon in a satisfactory working condition, periodic stripping and cleaning is necessary. In addition to ensuring that the component parts are clean and lubricated, any undue wear can be detected and the relevant part replaced as necessary.

Preparation

1. Check that the safety catch is at 'S' and the change lever is at 'R'.

2. Cock the weapon, engage the holding open catch and ensure visually that the chamber and body are clear. Allow the working parts to go forward by operating the bolt release. Do not operate the trigger, do not close the dust cover. The safety catch must remain on 'S' and the hammer must remain cocked throughout the time that the weapon is in a stripped state.

3. Only remove the sight if it cannot be properly cleaned in situ.

FIGURE 15 — REMOVING/ASSEMBLING TRIGGER MECHANISM HOUSING (TMH)

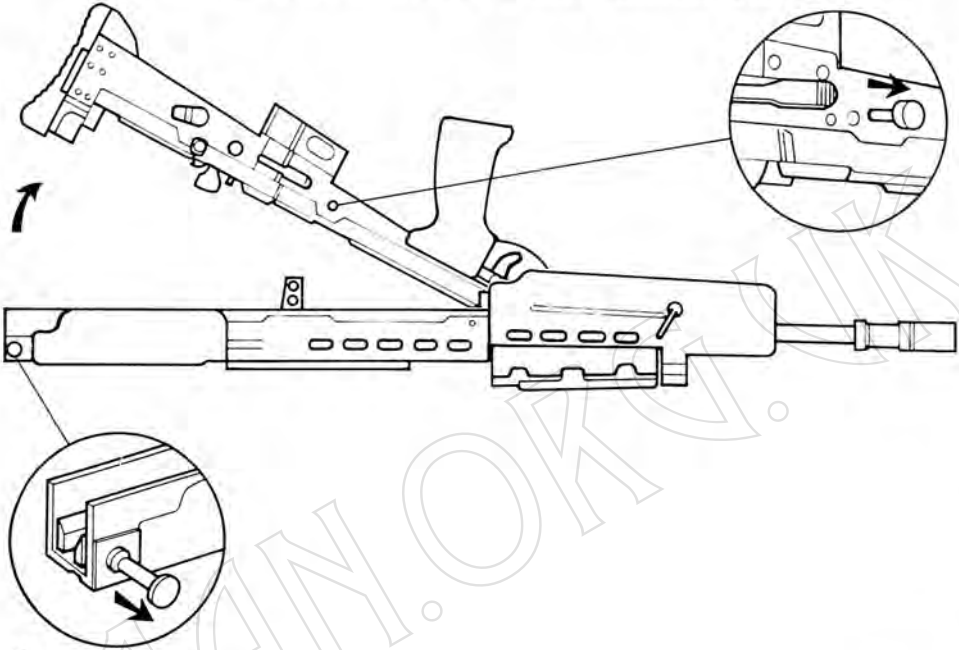

Trigger Mechanism Housing (TMH) (Fig. 15)

To Strip

1. Ensure the weapon is horizontal, but upside down. Fully withdraw the TMH rear locking pin, note the grooves on the pin then re-insert the pin approximately 5mm into the body, so that the groove nearest to the body is flush with the outside of its housing (a distinct click should be heard). This ensures that the end of the pin retains the recoil rod assembly while the TMH is being removed.

2. Withdraw the TMH forward locking pin and separate the TMH from the body by pulling the butt upwards and disengaging the TMH from its front catch.

To Assemble

1. Check that the TMH front locking pin is fully withdrawn, then insert the TMH front end into the catch behind the hand guard. Raise the butt of the TMH then press the body and TMH together. Fully insert the TMH rear locking pin then the front locking pin.

2. Test the action by cocking the weapon and engaging the holding open catch, then operate the bolt release, set the safety catch to 'R' and operate the trigger.

3. Set the safety catch to 'S' and close the dust cover.

FIGURE 16 — STRIPPING RECOIL ROD AND BOLT CARRIER ASSEMBLIES

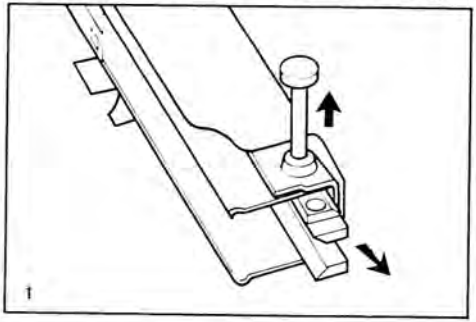

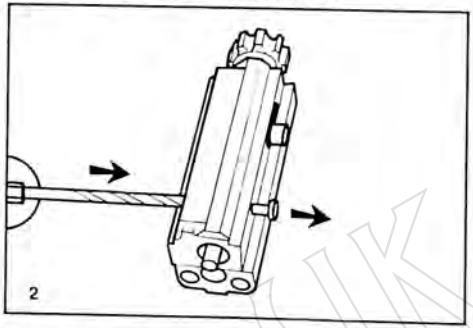

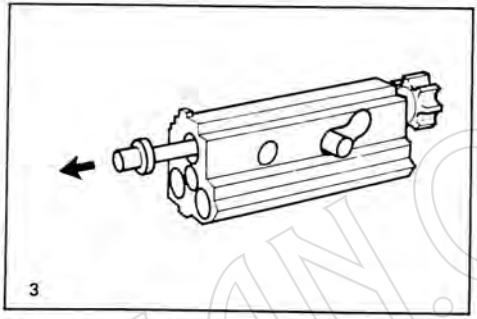

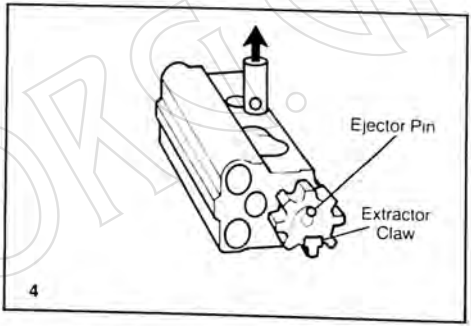

MAN.OR.UK

Recoil Rod and Bolt Carrier Assemblies (Fig.16)

To Strip

1. Remove the TMH as detailed, keeping the weapon horizontal and upside down.

2. Place a hand over the rear of the recoil rod assembly, fully withdraw the TMH rear locking pin then, under control, remove the recoil rod assembly. Do not separate the spring from the assembly.

3. Pull the cocking handle to the rear to unlock the bolt, then withdraw the handle from the carrier.

4. Place a hand over the rear of the body; raise the muzzle and slide out the bolt carrier assembly.

5. Remove the firing pin retaining pin, using the combination tool if necessary, and withdraw the firing pin from the rear of the bolt.

6. Pull the bolt fully forward in the carrier and remove the cam stud. Separate the bolt from the carrier.

FIGURE 17 — ASSEMBLING RECOIL ROD AND BOLT CARRIER ASSEMBLIES

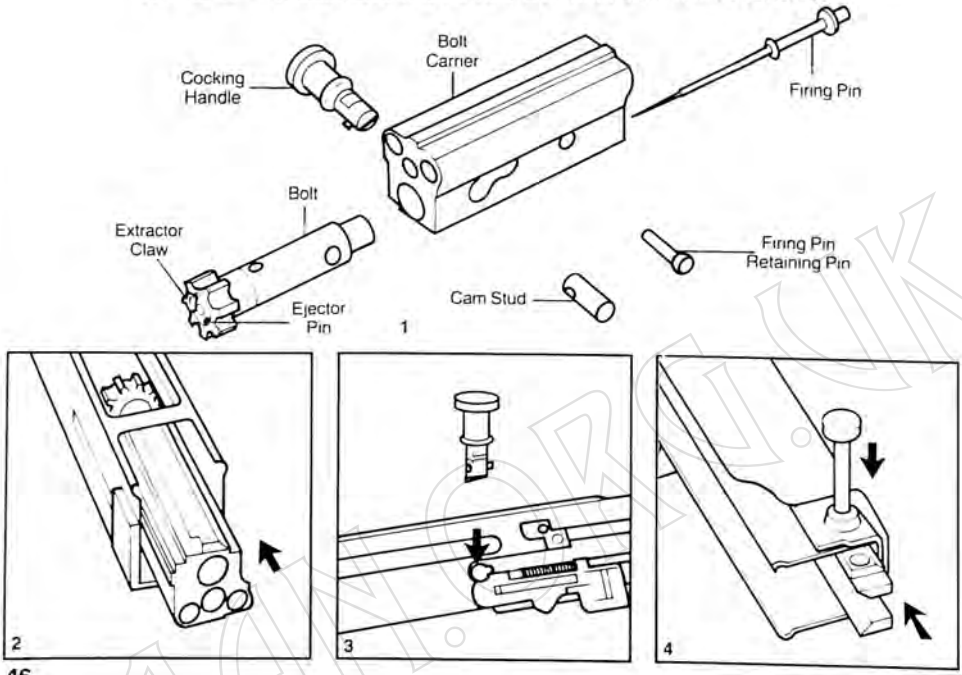

To Assemble (Fig. 17)

1. Align the ejector on the bolt with the cam stud recess in the carrier.

2. Insert the bolt into the carrier, align the cam stud hole in the bolt with the front of the cam recess in the carrier.

3. Hold the cam stud so that the firing pin hole in the stud is aligned to allow the firing pin to pass through it. Push the cam stud through the recess in the carrier and into position in the bolt.

4. Insert the firing pin through the back of the carrier, ensuring it is fully seated. Insert the firing pin retaining pin from the left side of the bolt carrier. When correctly seated, the retaining pin is flush with the sides of the carrier.

5. With the weapon horizontal and upside down, first ensure that the bolt is fully forward in the carrier, then place the carrier into the weapon and push far enough forward to align the cocking handle recess adjacent to the cocking guide in the body.

6. Insert the cocking handle through the side of the body and into the recess in the carrier. Push the carrier fully forward until the locking splines on the bolt have entered and locked into the barrel extension.

7. Align the recoil rods and spring with the holes in the rear of the carrier. Push the recoil rod assembly into the weapon until the end of the assembly is flush to the end of the body. Push in the TMH rear locking pin to engage the end of the assembly, but not sufficient to obstruct the centre area which accommodates the lug of the TMH.

FIGURE 18 — STRIPPING/ASSEMBLING GAS SYSTEM

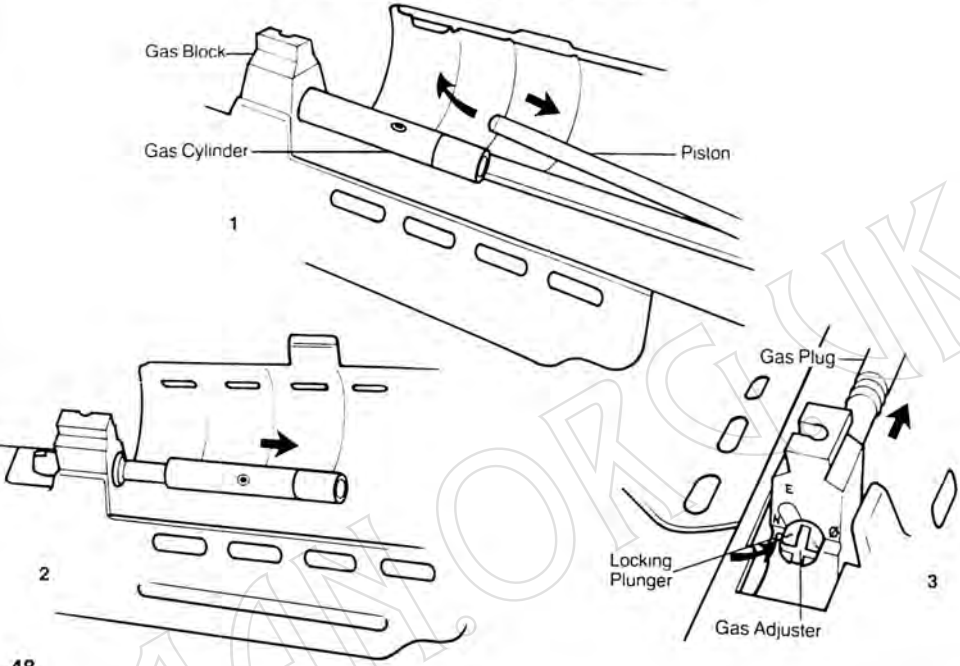

Gas System (Fig. 18)

To Strip

1. Ensure the weapon is horizontal but upright. Open the gas assembly top cover.

2. Grip the gas cylinder with the left hand and with the right hand push the piston to the rear against action of its return spring. Move the piston out of alignment with the cylinder, release the pressure and withdraw the piston, complete with spring, from the weapon. Do not separate the spring from the piston.

3. Remove the gas cylinder from the gas plug by pulling it towards the rear.

4. Remove the gas plug by pressing the plunger on the front of the plug and at the same time withdraw the plug from the rear of the gas block.

To Assemble

1. Insert the gas plug into the rear of the gas block. Depress the plunger and at the same time push the plug through the block. Rotate the plug until the plunger is aligned with the recess marked 'N' (normal) on the front of the gas block.

2. Fit the cylinder onto the rear of the gas plug and hold in position.

3. Turn the weapon on its side and carefully feed the spring end of the piston back into the central hole above the barrel extension. Push the piston to the rear to compress the spring, then align and engage the piston with the cylinder rear recess. Close the top cover.

FIGURE 19 — STRIPPING/ASSEMBLING MAGAZINE (COLT)

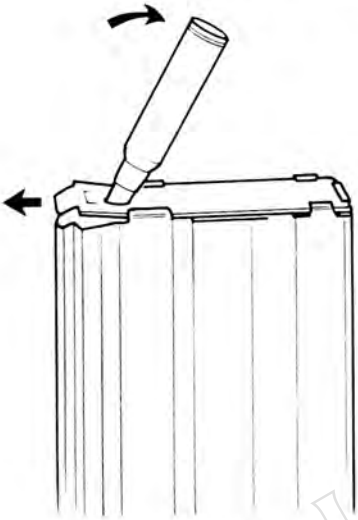

Removing
Bottom Plate

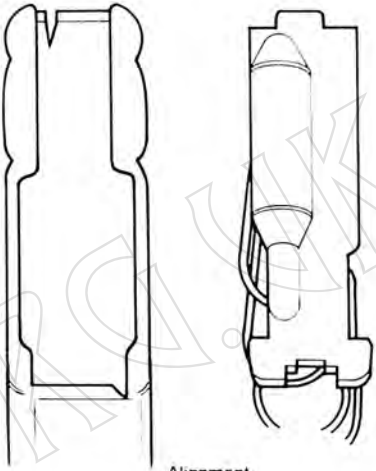

Alignment

Magazine Colt (Fig. 19)

To Strip

1. Hold the magazine in the left hand, with the bottom plate uppermost and observe the leverage hole and the locking lugs.

2. Using the nose of a bullet, insert it into the leverage hole and apply enough leverage to raise the locking lugs clear of the rear wall of the magazine. With leverage still applied, push the plate clear of the magazine and remove the spring and platform from the magazine. Do not remove the platform from the spring.

To Assemble

1. Ensure that the platform is aligned correctly, then insert the platform and spring into the magazine.

2. Press the spring in and insert the bottom plate between its guides, pushing in to retain the spring. Continue to push the plate until the locking lugs ride over the rear wall of the magazine and lock in position.

FIGURE 20 — STRIPPING/ASSEMBLING MAGAZINE (RADWAY GREEN)

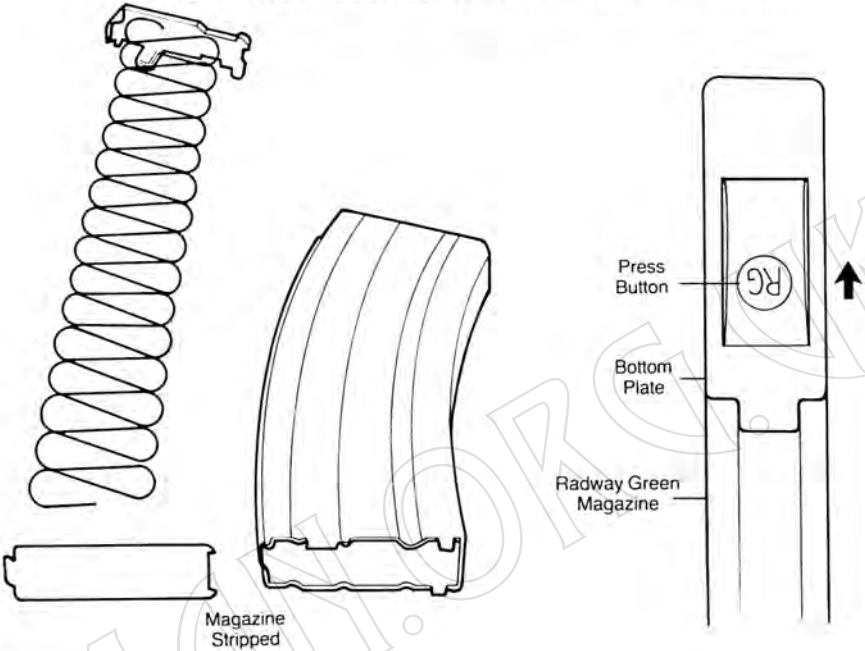

Magazine (Radway Green) (Fig. 20)

To Strip

1. Hold the magazine in the left hand with the bottom plate uppermost.

2. Push in the retaining stud and slide off the bottom plate in the direction of the forward edge. Remove spring and platform from the magazine.

To Assemble

1. Ensure that the platform is aligned correctly, then insert the platform and spring into the magazine.

2. Push down the retaining study and slide on the bottom plate. Ensure that the stud engages in its recess in the bottom plate.

Operational Stripping

During tactical training or on operations, it may be undesirable to strip the complete weapon at any one time, in order to carry out maintenance. Accordingly, it is possible to strip only one part at a time, provided that the basic safety precautions are taken. The gas assembly may be stripped provided the weapon is unloaded and the bolt carrier assembly is held to the rear. The TMH may be removed without removing any other part. As with normal stripping all parts should be placed, in the sequence of stripping, on a clean surface.

FIGURE 21 — TOOLS

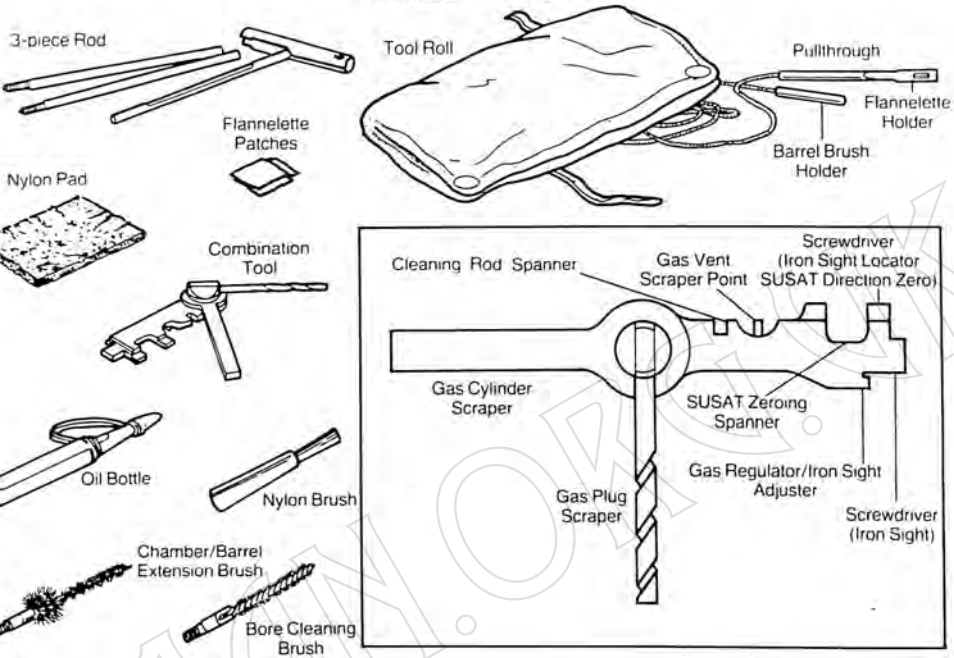

CLEANING

USE OF CLEANING EQUIPMENT (Fig. 21)

Cleaning Rod — 3 section rod used with either the bore or chamber brushes. (Two sets of rods needed to clean full barrel length.) Do not use if section joints are not close and smooth. Insert into muzzle end of the barrel, twist only clockwise.

Bore Brush — Only to be used to clean the bore, oil may be applied to assist in removing fouling and stains within the bore. Can also be used with the pullthrough, in which case it is only to be drawn from the chamber end of the barrel.

Chamber/Barrel Extension Brush — Only to be used for cleaning the chamber, the barrel extension or interior of the gas block. It is to be used only with the cleaning rod.

Pullthrough — Can be used instead of the rod, to draw a swab or bore brush through the barrel. It must first be unravelled and stretched to remove any kinks. A swab can be fitted, folded in half/lengthways, into the eyelet, with an equal amount of swab each side of the eyelet.

Swabs —Mainly used to dry clean and lubricate the bore. They are the optimum size for the purpose, any larger than 43 x 43mm will jam the barrel. Also used for general cleaning.

Nylon Pad (Scotchbright) and Brush — Used primarily for removing carbon fouling, but can also be used with oil to remove rust. Must not be used on weapon parts coated with a protective finish as the pad will remove the finish.

Combination Tool —Multipurpose tool used when cleaning the weapon, fitting and adjusting the sights, and adjusting the gas system.

CLEANING

1. Ensure the weapon is unloaded and stripped.
2. Using the nylon brush, remove loose fouling or debris from the weapon parts.
3. Using a piece of lightly oiled swab, clean the outside of the weapon.
4. Using the chamber/barrel extension brush and cleaning rod, insert it into the chamber. With a clockwise rotating action, dislodge any fouling or debris.
5. Using the nylon brush and swab, clean the inside of the body.
6. Clean the barrel, with the bore brush, then use the pullthrough and dry clean swabs.
7. Carbon fouling is removed with the combination tool scrapers and the nylon pad. Wipe clean the piston, gas cylinder and gas plug, then lightly oil.
8. Dry clean the whole of the weapon.
9. Lightly oil the weapon and magazine, but not the SUSAT or Iron Sight apertures and post.
10. Assemble the weapon and test for correct functioning.
11. Using nylon brush and oily swabs, clean the SUSAT bracket, ensuring no oil gets on the rubber eye piece or lens. Dry clean the exterior and use lens cleaning cloths or tissues to clean the lens, lightly oil the shoe, then refit the sight.

MAN.OR.UK

SETTINGS AND ADJUSTMENTS

ZEROING THE WEAPON

The act of zeroing is to superimpose the true position of the Mean Point of Impact (MPI) on the correct zero position so that with the appropriate sight setting and use of wind allowance, a group of shots fired will form centrally at all other ranges selected.

To determine the true position of the MPI, a number of shots, not less than 20, should be fired at the same aiming mark under the same conditions. The firer must be capable of consistently achieving an average of 150mm group using the SUSAT sight or 200mm group using an Iron Sight, with 5 rounds at 100 metres.

It is essential for each firer to zero his own weapon because:

1. Variations in aiming.
2. Effect of 'weapon jump', influenced by the build, firing position and grip of the firer.

Zeroing should be carried out:

1. On initial issue of the weapon.
2. Before and, whenever possible, during active service.
3. Change of sight.
4. When accuracy of weapon is in doubt.

Zeroing Range

The ideal range for zeroing is 100 metres, which combines clarity of aim with lack of wind effect. A range of 25 metres may be used if 100 metre range is not available.

Correct Zero Position (CZP)

The correct positions of the MPI in relation to the point of aim (POA) at 100 metres and at 25 metres, with sight settings shown, are:

Type of Sight	Sightsetting	CZP — IW and LSW	
		100 metres	25 metres
SUSAT	300 metres	100mm above	25mm below the POA
Iron Sight	200 metes	100mm above	25mm below the POA

the MPI obtained does not coincide with the CZP given above, then the sights of the weapon requires djustment.

MAN.OKCIK

SIGHT ADJUSTMENT

The sights of the weapon are adjustable for elevation and for direction. The combination tool should be used to make these adjustments.

SUSAT (Fig. 9)

Elevation To move the MPI up, turn the vertical adjustment nut in the direction indicated by arrow 'U'. To move the MPI down turn the adjuster in the direction of arrow 'D'. One graduation moves the MPI approximately 13mm vertically at 25 metres or 50mm at 100 metres.

Direction To move the MPI left, loosen the lock-nut and turn the horizontal adjuster screw in the direction of arrow 'L'. To move the MPI right turn the adjuster in the direction of arrow 'R'. When the required adjustment has been made, turn the opposite adjustment screw against the direction of its arrow, then tighten the lock-nuts. One graduation moves the MPI approximately 13mm horizontally at 25 metres or 50mm at 100 metres.

FIGURE 22 — EYE RELIEF ADJUSTMENT

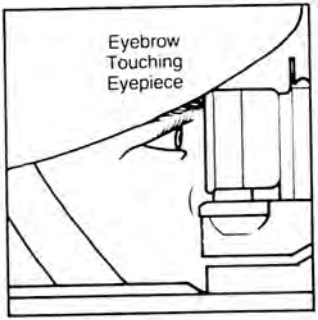

SUSAT Sight

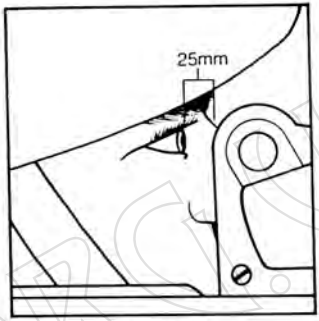

Iron Sight

MAN.OKCUK

Iron Sight (Fig. 11)

Elevation To move the MPI up, depress the locking plunger on the foresight, using the combination tool, then rotate the vertical adjustment screw in the direction of the arrow 'U'. To move the MPI down, turn the screw in the direction of arrow 'D'. One graduation will raise or lower the MPI approximately 13mm at 25 metres or 50mm at 100 metres.

Direction To move the MPI left, depress the locking plunger on the horizontal adjustment screw, using the combination tool, and turn the screw in the direction of arrow 'L'. To move the MPI right turn the screw in the opposite direction. One graduation moves the MPI horizontally approximately 13mm at 25 metres or 50mm at 100 metres.

Eye Relief Adjustment (Fig. 22)

To adjust either the SUSAT or the Iron Sight to obtain correct eye relief:

1. Loosen the clamping nuts/screws.
2. Operate the lifting plate (SUSAT), or unscrew the retention stud (Ironsight), and slide the sight forward or backward.
3. Adjust so that the retention stud is located in the hole in the sight rail that gives the best possible eye relief to the firer.
4. Tighten the clamping nuts/screws.
5. Optimum eye relief is achieved by moving the position of the head.

FUNCTIONAL FAILURES

IMEDIATE ACTION

he weapon fails to fire, or stops firing, carry out the Immediate Action (IA) as follows:

If cocking handle fully to rear and magazine empty —
Change magazine, operate bolt release, aim, test and adjust, continue firing.

If cocking handle NOT fully to rear —
Cock, engage holding open catch, look into body and chamber —

- Chamber empty and rounds in magazine —
  Check magazine correctly fitted, operate bolt release, re-aim, test and adjust, continue firing.

- If live round or empty case in body or chamber —
  Remove magazine, clear obstruction, replace magazine, operate bolt release, re-aim, test and adjust, continue firing.

It is important that any round which has been involved in a stoppage or used as a tool, whether it appears damaged or not, is not to be loaded into a magazine or any attempt made to fire it.

MAN.OK.UK

GAS STOPPAGE

If, after carrying out the IA, the weapon fires one or two rounds and then stops again, and, after repeating the IA the same condition arises —

1. Operate the bolt release, put the safety catch to 'S' and, using the combination tool, turn the gas plug so that the plunger engages the 'E' (Excess) gas setting.

2. Place the safety catch to 'F', aim, test and adjust, continue firing.

3. As soon as is practicable the gas assembly must be cleaned and reset to the 'N' (Normal) setting.

URTHER ACTION

an obstruction in the chamber cannot be removed during the IA, or obstructions occur repeatedly, or e weapon will not fire after carrying out the IA, then:—

Unload the weapon and remove the TMH, bolt and bolt carrier.

Inspect the extractor, ejector, retaining pins, the firing pin and the chamber.

If bolt parts are damaged or loose, fit serviceable spare bolt assembly.

If the obstructed chamber is due to a damaged extractor:

- Replace the bolt with a spare assembly, cock the weapon to allow the extractor to grip the base of the round and remove the obstruction, engage the holding open catch and visually inspect the chamber through ejection opening.
- If the chamber is clear, reload and operate the bolt release, set the change lever as required, put the safety catch to 'F', test and adjust, and continue to fire.

the chamber does not appear obstructed and there are no damaged parts, examine the chamber and there is a separated case — refer the weapon to an armourer.

continued stoppages occur, the weapon should be thoroughly cleaned and examined. Particular ttention must be paid to the gas system parts. These should be cleaned and gauged, using the ombination tool scrapers, after every 200 rounds fired, regardless of satisfactory functioning of the ystem.

EMAN.CO.UK

For further information contact:
Royal Ordnance Small Arms Limited
Divisional Sales
Ordnance Road
Enfield Lock
Middlesex
EN3 6JL
Telephone: 0992 763333
Divisional Sales Telex 923801 ROENDS G

WWW.RIFLEMAN.ORG.UK