Uniden®

BCD436HP

and

BCD536HP

Owner's Manual

©2024 Uniden America Corporation

Printed in Vietnam
U01UB375ZZB(0)

The AMBE+2™ voice coding Technology embodied in this product is protected by intellectual property rights including patent rights, copyrights and trade secrets of Digital Voice Systems, Inc.

The voice coding technology is licensed solely for use within this Communications Equipment. The user of this technology is explicitly prohibited from attempting to extract, remove, decompile, reverse engineer, or disassemble the object code, or in any other way convert the object code into a human-readable form.

microSD is a registered trademark of SanDisk Corporation.

HomePatrol is a registered trademark of Uniden America Corporation, Flower Mound, Texas.

At Uniden, we are always improving our products. This manual may not contain the latest improvements to these model. Check our Owner's Manual downloads at www.uniden.com/Support/Owner'sManuals for the latest updates

© 2024 Uniden America Corporation, Flower Mound, Texas.

Questions? Problems? Get help on the web at uniden.com.

CONTENTS

IMPORTANT INFORMATION **1**
THE FCC WANTS YOU TO KNOW 1
MODIFICATION NOTICE 1
PART 15 INFORMATION 1
GENERAL PRECAUTIONS 2
Earphone Warning *2*
Liquid Exposure Warning *2*
Power Disconnection Caution *2*
SCANNING LEGALLY 2
AVIS D'INDUSTRIE CANADA 3
INTRODUCTION **4**
HOW DOES THE HOME PATROL® WORK? 4
WHAT YOU HEAR 4
CREATE FAVORITES LISTS 4
AVOID TRANSMISSIONS 4
REPLAY TRANSMISSIONS 5
RECORD TRANSMISSIONS 5
MAIN FEATURES **5**
INCLUDED WITH YOUR SCANNER **8**
BCD436HP 8
BCD536HP 9
INSTALLING YOUR SCANNER **9**
POWER RELATED ISSUES 9
CONNECTING AN OPTIONAL ANTENNA 9
CONNECTING AN EXTENSION SPEAKER 9
BASE STATION 10
VEHICLE INSTALLATION 11
Mounting Using the Bracket *11*
Mounting Using the DIN-E Sleeve *12*
Removing the Scanner from the DIN-E Sleeve *13*
Connecting DC Cable with Orange Wire *14*
USING INTERNAL BATTERIES (BCD436HP ONLY) 14
Using Rechargeable Batteries *14*
UNDERSTANDING THE MEMORY **14**
FAVORITES LISTS 14
SYSTEMS 15
TRUNKING SITES 15
DEPARTMENTS 15
SENTINEL SOFTWARE **15**
MANAGE PROFILES 15

MANAGE FAVORITES LISTS 15
MANAGE DATABASES 15
SHARE FAVORITES LISTS 15
HOW TO INSTALL SENTINEL SOFTWARE 16
UPDATING FIRMWARE 16
UPDATING THE DATABASE 16
SETTING UP YOUR SCANNER. 17
TURN ON THE SCANNER 17
KEYPAD AND KNOB CONTROLS 18
BCD536HP 18
BCD436HP 19
COMMON CONTROLS (BCD436HP and BCD536HP) 21
SET YOUR LOCATION AND RANGE. 23
LOCATION OPTIONS 23
UNDERSTANDING RANGE 24
SELECTING SERVICE TYPES 24
NAVIGATING THE MENUS 24
DATA NAMING. 25
DISPLAY MENU 25
A Look at the Display. 27
SETTINGS MENU 30
Adjust Key Beep 30
Battery Option (BCD436HP Only). 30
Band Defaults 30
Auto Shutoff 31
Set Clock. 31
Replay Options 31
Restore Options. 31
See Scanner Information 31
Wi-Fi Setup (BCD536HP Only) 32
Wi-Fi Options 32
QUICK KEY CONCEPTS. 32
QUICK KEYS 32
FAVORITES LIST QUICK KEYS 32
SYSTEM QUICK KEYS. 33
DEPARTMENT/SITES QUICK KEYS 33
SEARCH KEYS. 33
PLANNING PROFILES 33
STARTUP KEYS 33
NUMBER TAGS 33
ALERTS 33
MANAGING FAVORITES LISTS 34

NEW FAVORITES LIST/ FAVORITES LIST OPTIONS 34
UNDERSTANDING LOCATION CONTROL 35
PROGRAMMING SYSTEMS 35
NEW SYSTEM/SYSTEM SETTINGS 36
SYSTEM SETTINGS 36
SYSTEM OPTIONS 36
PROGRAMMING SITES 39
NEW SITE/SITE OPTIONS 39
PROGRAMMING DEPARTMENTS 42
NEW DEPARTMENT/DEPARTMENT OPTIONS 42
DEPARTMENT OPTIONS 43
PROGRAMMING FREQUENCIES/TGIDS 44
QUICKLY STORING A FREQUENCY/TGID 44
NEW CHANNEL/CHANNEL OPTIONS 44
CHANNEL OPTIONS 45
SET SCAN SELECTION 47
MANAGING FULL DATABASE 48
USING STARTUP KEYS 48
TO USE A STARTUP KEY: 48
PRIORITY SCANNING 48
PRIORITY SCAN OPTIONS 49
SCANNING ORDER 49
SCANNING 50
SELECTING QUICK KEYS 51
TOGGLE DISPLAY MODES 52
TOGGLE ID SCAN OR ID SEARCH 53
SELECT SERVICE TYPES 53
HOLDING 53
REPLAY THE LAST TRANSMISSIONS 53
START/STOP RECORDING 53
ADVANCED CHANNEL MENU 53
STORE A SEARCH FREQUENCY (SEARCH WITH SCAN) 54
ATTENUATION 54
MODULATION 54
Conventional Channel Modulation 54
Site Modulation 54
INTERMEDIATE FREQUENCY EXCHANGE 54
REPEATER FREQUENCY CONVENTIONAL CHANNEL 54
CHANNEL VOLUME OFFSET 55
AVOIDING CHANNELS, DEPARTMENTS, SITES, AND SYSTEMS 55
CHANGE YOUR LOCATION 55
SET THE RANGE 55

DIRECT FREQUENCY/TGID ENTRY 55
USING NUMBER TAGS 56
CLOSE CALL MODES 56
Close Call Hit *56*
PRIORITY MODES 57
Weather Alert Priority *57*
CUSTOM SEARCH BY SEARCH KEY 57
CLOSE CALL ONLY 57
WEATHER SCAN 57
TONE-OUT STANDBY/SEARCH 57
REVIEW AVOIDS 57
QUICK SEARCH 58
P25 ADJUSTMENT MODE 58
USING A GPS 58
LOCATION-BASED SCANNING 58
DISCOVERY MODE 59
NEW SESSION 59
SESSION OPTIONS 60
Start Discovery *60*
Edit Session Name *60*
Set Limit Frequencies (Conventional Only) *60*
Set Modulation (Conventional Only) *60*
Set Step (Conventional Only) *60*
Set Delay *60*
Set Logging *61*
Set Compare to Database *61*
Set Record Duration *61*
Set Time-Out Timer *61*
System Information (Trunking Only) *61*
Set Auto Store *61*
Delete Session *61*
Change System (Trunking Only) *61*
REVIEW DISCOVERY 62
SEARCH/CLOSE CALL OPTIONS 62
SEARCH OPTIONS 64
EDIT CUSTOM 64
SET SEARCH KEY 65
SEARCH WITH SCAN 65
QUICK SEARCH 65
CUSTOM SEARCH 65
Change Direction or Resume Search *66*
Select Custom Search Bands *66*

Frequency Hold **66**
Avoiding Frequencies *66*
Search Attenuation *66*
Modulation *66*
Direct Frequency Entry *66*
Intermediate Frequency Exchange *66*
View Repeater Frequency *66*
Replay the Last Transmissions *67*
Start/Stop Recording *67*
Storing Frequencies *67*
Search Menu *67*
Close Call Modes *67*
Weather Alert Priority Mode *67*
Review Search Avoids *67*
Close Call Hit *67*
Direct Frequency Entry *68*
Clear All Search Avoids *68*
CLOSE CALL **68**
CLOSE CALL OPTIONS 68
Close Call Only *68*
Hits with Scan *69*
Set CC Mode *69*
Set CC Bands *69*
Set CC Alert *69*
USING CLOSE CALL 70
Toggle Close Call Bands *70*
Cancel a Hit *70*
Holding on a Hit *70*
View Last Hit *70*
Avoiding Hits *70*
Store a Hit **70**
Close Call Attenuation **71**
Review Avoids **71**
Clear All Avoids **71**
Attenuation *71*
Modulation *71*
Intermediate Frequency Exchange *71*
View Repeater Frequency *71*
Replay the Last Transmissions *71*
Start/Stop Recording *71*
Storing *72*
Quick Search at Current Frequency *72*

Weather Alert Priority Mode 72
Close Call Menu 72
WEATHER OPERATION 72
WEATHER OPTIONS 72
Set Delay Time 72
Set Attenuator 72
Set Audio AGC 73
Program SAME 73
Weather Alert Priority 73
Weather Scan 73
Change Channel 73
Attenuation 74
Intermediate Frequency Exchange 74
Replay the Last Transmissions 74
Quick Search 74
Weather Menu 74
WEATHER ALERT 74
FIRE TONE-OUT 75
TONE-OUT SETUP 75
Edit Name 76
Set Frequency 76
Set Tone 76
Set Delay Time 76
Set Alert 76
Set Audio AGC 76
FIRE TONE-OUT STANDBY/SEARCH 77
Select a Different Tone-Out 77
Listen to Tone-Out Frequency 77
Attenuation 77
Modulation 78
Intermediate Frequency Exchange 78
Start/Stop Recording 78
Store Found Tones 78
Tone-Out Menu 78
APPENDIX 78
TROUBLESHOOTING 78
Scan Mode, Nothing to Scan 78
Scanning Interrupted 78
All Channels Out of Range 79
CHARACTERS 79
DEFAULT BAND COVERAGE 80
SERVICE TYPES 81

Reformatting the microSD Card *82*
ENTERING IDS 82
TYPE II SPECIAL STATUS BITS. 83
WEATHER CHANNELS. 84
CTCSS FREQUENCIES 86
DCS CODES 87
REVERSE LIST 87
REPEATER FREQUENCY LIST 88
TECHNICAL SPECIFICATIONS - BCD436HP 89
TECHNICAL SPECIFICATIONS - BCD536HP 91
WARRANTY INFORMATION 94

IMPORTANT INFORMATION

THE FCC WANTS YOU TO KNOW

IMPORTANT! This scanning radio has been manufactured so that it will not tune to the radio frequencies assigned by the FCC for cellular telephone usage. The Electronic Communications Privacy Act of 1986, as amended, makes it a federal crime to intentionally intercept cellular or cordless telephone transmissions or to market this radio when altered to receive them. The installation, possession, or use of this scanning radio in a motor vehicle may be prohibited, regulated, or require a permit in certain states, cities, and/or local jurisdictions. Your local law enforcement officials should be able to provide you with information regarding the laws in your community.

Caution - FCC RF Exposure Requirements

Transmitter operating conditions: The antenna(s) used for this transmitter must be installed to provide a separation distance of at least 7.8 in. (20 cm) from all persons and must not be collocated or operating in conjunction with any other antenna or transmitter

MODIFICATION NOTICE

Changes or modifications to this product not expressly approved by Uniden, or operation of this product in any way other than as detailed by this Users Guide, could void your authority to operate this product.

PART 15 INFORMATION

This equipment has been tested and found to comply with the limits for a Class B digital device, pursuant to part 15 of the FCC Rules. These limits are designed to provide reasonable protection against harmful interference in a residential installation.

This equipment generates, uses, and can radiate radio frequency energy and, if not installed and used in accordance with the instructions, may cause harmful interference to radio communications. However, there is no guarantee that interference will not occur in a particular installation. If this equipment does cause harmful interference to radio or television reception, which can be determined by turning the equipment off and on, the user is encouraged to try to correct the interference by one or more of the following measures:

- Reorient or relocate the receiving antenna.
- Increase the separation between the equipment and receiver.
- Connect the equipment into an outlet on a circuit different from that to which the receiver is connected.
- Consult the dealer or an experienced radio/TV technician for help.

This device complies with Part 15 of the FCC Rules. Operation is subject to the following two conditions: (1) this device may not cause harmful interference, and (2) This device must accept any interference received, including interference that may cause undesired operation.

This device complies with Industry Canada license-exempt RSS standard(s). Operation is subject to the following two conditions: (1) this device may not cause interference, and (2) this device must accept any interference, including interference that may cause undesired operation of the device. In Canada, a radio license must be obtained prior to possession and use of this scanner receiver.

Le présent appareil est conforme aux normes CNR d'Industrie Canada applicables aux appareils radio exempts de licence. L'exploitation est autorisée aux deux conditions suivantes : (1) l'appareil ne doit pas produire de brouillage, et (2) l'utilisateur de l'appareil doit accepter tout brouillage radioélectrique subi, même si le brouillage est susceptible d'en compromettre le fonctionnement.

GENERAL PRECAUTIONS

Before you use this scanner, please read and observe the following:

Earphone Warning

You can use an optional 32Ω stereo headset or earphone with your scanner. Use of an incorrect earphone or headset might be potentially hazardous to your hearing. The output of the phone jack is monaural, but you will hear it in both headphones of a stereo headset.

Set the volume to a comfortable audio level coming from the speaker before plugging in the earphone or headset. Otherwise, you might experience some discomfort or possible hearing damage if the volume suddenly becomes too loud because of the volume control or squelch control setting. This might be particularly true of the type of earphone that is placed in the ear canal.

Liquid Exposure Warning

Uniden does not represent this unit to be waterproof. To reduce the risk of fire or electrical shock, do not expose this unit to rain or moisture!

Power Disconnection Caution

IMPORTANT: Always turn the scanner off before disconnecting external power. Some settings are saved only as the scanner is powering down.

SCANNING LEGALLY

Your scanner covers frequencies used by many different groups, including police and fire departments, ambulance services, government agencies, private companies, amateur radio services, military operations, pager services, and wireline (telephone and telegraph) service providers. It is legal to listen to almost every transmission your scanner can receive. However, there are some transmissions that you should never intentionally listen to. These include:

- Telephone conversations (cellular, cordless, or other private means of telephone signal transmission)
- Pager transmissions
- Any scrambled or encrypted transmissions

According to the Electronic Communications Privacy Act (ECPA), you are subject to fines and possible imprisonment for intentionally listening to, using, or divulging the contents of such a conversation unless you have the consent of a party to the conversation (unless such activity is otherwise illegal). This scanner has been designed to prevent the reception of cellular telephone

transmissions and the decoding of scrambled transmissions. This is done to comply with the legal requirement that scanners be manufactured so they are not easy to modify to pick up these transmissions. Do not open your scanners case to make any modifications that could allow it to pick up transmissions that are illegal to monitor. Modifying or tampering with your scanners internal components or using it in a way other than as described in this manual could invalidate your warranty and void your FCC authorization to operate it. In some areas, mobile and/or portable use of this scanner is unlawful or requires a permit. Check the laws in your area. It is also illegal in many areas (and a bad idea everywhere) to interfere with the duties of public safety officials by traveling to the scene of an incident without authorization.

AVIS D'INDUSTRIE CANADA

Le présent appareil est conforme aux normes CNR d'Industrie Canada applicables aux appareils radio exempts de licence. Son utilisation est assujettie aux deux conditions suivantes : (1) l'appareil ne doit pas produire de brouillage, et (2) l'utilisateur de l'appareil ne doit accepter tout brouillage radioélectrique qu'il reçoit, même se lebrouillage est susceptible d'en compromettre le fonctionnement.

Une version française de ce guide d'utilisation est disponible sur le site Web d'Uniden au : www.uniden.com.

1. Sur le site d'Uniden, sélectionnez " Support", puis " Owner's Manuals".
2. Au menu déroulant de sélection des produits, choisissez "Scanners".
3. Sélectionnez le modèle et cliquez sur le drapeau canadien.
4. La version française du guide d'utilisation de ce modèle.

INTRODUCTION

The Uniden BCD536HP and BCD436HP are digital TrunkTracker V communications receivers that require no user programming. Simply turn it on, enter your location, and you will immediately begin hearing communications in your area. This functionality is made possible by combining the rich radio system database from RadioReference.com with Uniden's patented radio system selection methods to correctly identify and monitor only nearby systems.

HOW DOES THE HOME PATROL® WORK?

When you set your location, the scanner searches its databases for channels near that location. If you enter your zip code, the scanner searches within a 20 mile radius of the center of that zip code. If you use the Auto Locate feature, that range increases to 30 miles. If you manually enter your location or connect an optional GPS receiver, your scanner will select channels that apply to your precise location. You can adjust the range from 0 to 50 miles.

Your scanner uses these databases:

- Radio System Database – provided by www.radioreference.com, this database contains radio system information including frequencies, trunked talk groups, and geographic locations for radio systems across most of North America.
- ZIP Code Geographic Database – provides geographical coordinates for most zip and postal codes in the US and Canada.
- RadioReference SysID Database – contains system ID and geographic location information for trunked radio systems across North America.

WHAT YOU HEAR

Your scanner has over 10,000 police, fire, ambulance, business, utility, and other agencies set for instant access. You can also listen to weather channels and weather alerts, and you can set your scanner to monitor weather alerts.

NOTE: There are some communications that the public is locked out from monitoring. Your scanner cannot receive agencies that scramble their communications; it also cannot receive agencies on private proprietary systems.

Because there are so many different kinds of communications going on, you can turn on specific types of agencies you want to hear (and turn off those you don't).

CREATE FAVORITES LISTS

As you find transmissions you like and would like to monitor again, you can save them to a Favorites List. When you opt to listen to a Favorites List, your scanner will monitor only the transmissions from that list.

You can assign a Quick Key to a Favorites List (FLQK) that allows you to quickly turn a Favorites List on or off by simply entering the quick key on the keypad while scanning.

AVOID TRANSMISSIONS

You can also select transmissions for your scanner to Avoid (ignore).

REPLAY TRANSMISSIONS

Your scanner Replay feature acts as an instant replay of the transmissions you've just heard. You can set how long a period Replay records for instant playback. This period can range from 30 seconds to 240 seconds (4 minutes). While you can replay that recording immediately and continue replaying it, you cannot save it for future listening.

RECORD TRANSMISSIONS

With your scanner, you can record transmissions. When you begin recording, your scanner adds the Replay recording buffer to the recording. These recording sessions are saved and can be replayed on demand. Rename and delete sessions through the Review Recordings submenu.

MAIN FEATURES

No Programming Required – Factory programmed microSD® card for all known radio systems in the US and Canada. The database is updatable with the Sentinel software and Uniden updates the main database weekly.

Scan by Location – Allows you to set your location(s) by zip/postal code or GPS coordinates for instant reception. The Auto-locate feature will find local systems if you don't know where you are.

Favorites Scan – Allows you to organize your Systems into Favorites Lists. The scanner will scan multiple Favorites Lists and Full Database at the same time.

4 GB microSD card (provided - 1 GB up to 32 GB supported) – For storing Favorites Lists, Profiles, all your settings, Discovery sessions, and recording sessions. (BCD436HP - located behind the batteries; BCD536HP - located on the the scanner faceplate.)

Location Based Scanning – Connect to a GPS receiver (not included) for precise system selection and continuing reselection when you travel. The scanner can automatically Avoid and Unavoid Trunked Sites and Departments in Systems based on your current location as provided by an external GPS unit.

Range Control – Lets you set how far out from your current location the scanner will search for channels in Favorites Lists and the database. Location precision for departments and sites that allows you to define a location and range using rectangles instead just of a single circle.

Wi–Fi Dongle (BCD536HP Only) – With a Wi-Fi app to connect your iPad/Android Tablet/ computer to remotely control the scanner.

Trunk Tracker V Operation – Scans APCO 25 Phase 1 and Phase 2, X2-TDMA, Motorola, EDACS, and LTR trunked systems, as well as conventional analog and P25 digital channels.

Multi-Site Trunking – Lets you program the scanner to share trunked system IDs across multiple sites without duplicating IDs.

Control Channel Only Scanning – With Motorola trunking frequencies, you do not have to program voice channel frequencies.

Instant Replay – Plays back up to 240 seconds (4 minutes) of the most recent transmissions.

Audio Recording – Capture transmissions for later playback.

Encryption Muting - APCO P25 encrypted voice is muted automatically.

Custom Alerts – You can program your scanner to alert when you receive, a Channel or Unit ID, a Close Call hit, an ID is transmitted with an Emergency Alert, or a Tone-out hit. For each alert in the scanner, you can select from 9 different tone patterns, 15 volume settings, 7 colors, and 3 flash patterns.

Multicolor LED Alert – The alert LED with 7 colors, Blue, Red, Magenta, Green, Cyan, Yellow, or White, can be used with your Custom Alerts.

Trunking Discovery – Monitors system traffic on a trunked radio system to find unknown IDs and automatically records audio from and logs new channels for later review and identification.

Conventional Discovery – Searches a range of frequencies to find unknown frequencies and automatically records audio from and logs new channels for later review and identification.

Scan by Service Types – Scan your channels by Service Type i.e. Fire, Police, Railroad, etc.

Scan Speed - 85 channels per second.

Search Speed – 80 step/sec. (typical) in Search mode (max) except for 5 kHz steps. 250 step/sec. (typical) in Search mode (max) – (Turbo Search) for 5 kHz steps.

Multi-Level Display and Keypad light – Makes the display and keypad easy to see in dim light with three light levels.

Temporary or Permanent Avoid – For Systems/Sites/Departments/Channels.

System/Channel Number Tagging – Number tags allow you to quickly navigate to a specific Favorites List, System, or Channel.

Start-up Configuration – You can program each of your Favorites Lists with a Startup Key (0-9) so that when you power up the scanner and press the key number, just those Favorites Lists assigned to the key will be enabled for scan.

Close Call© RF Capture Technology – Lets you set the scanner so it detects and provides information about nearby radio transmissions. Close Call Do-not-Disturb checks for Close Call activity in between channel reception so active channels are not interrupted.

Broadcast Screen – Allows the scanner to ignore hits on known broadcast frequencies including pager frequencies in search and Close Call modes. You can also program up to 10 custom frequency ranges that the scanner will ignore.

Fire Tone-Out Standby/Tone Search – Lets you set the scanner to alert you if a two-tone sequential page is transmitted. You can set up to 32 Tone-Outs. The scanner will also search and display unknown tones.

PC Programming – Use the Sentinel software to manage your scanners Profiles, Favorites Lists, Databases, and firmware updates.

Analog and Digital AGC – Helps automatically balance the volume level between different radio systems.

Priority/Priority w/DND Scan – priority channels let you keep track of activity on your most important channels while monitoring other channels for transmissions.

Priority ID Scan – Allows you to set priority to talkgroup IDs.

Intermediate Frequency Exchange – Changes the IF used for a selected channel/frequency to help avoid image and other mixer-product interference on a frequency.

Individual Channel Volume Offset – Allows you to adjust the volume offset for each channel.

Configurable Band Defaults – Allows you to set the step (5, 6.25, 7.5, 8.33, 10, 12.5,15, 20, 25, 50 or 100 kHz) and modulation (AM, FM, NFM, WFM, or FMB) for 31 different bands.

Repeater Find – Allows the scanner to try to switch to the repeater frequency if an input frequency is found.

Adjustable Scan/Search Delay/Resume – Set a delay up to 30 seconds or a forced resume up to 10 seconds for each channel or search.

Data Naming – Allows you to name each Favorites List, System, Site, Department, Channel, ID, Location, Custom Search, and SAME group, using up to 64 characters.

Duplicate Input Alert – Alerts you if you try to enter a duplicate name or frequency already stored in the scanner.

Quick Keys – You can assign up to 100 Quick Keys to your Favorites Lists, Systems, Departments, and Sites.

Search Avoids – You can temporarily Avoid up to 250 frequencies and permanently Avoid up to 250 frequencies in any Search mode or Close Call mode.

10 Custom Searches – Lets you program up to 10 custom search ranges.

Search with Scan Operation – Lets you include Custom Search ranges during scan operation.

3 Search Keys – You can assign 3 of the number keys to start a Custom Search, Tone-Out Search, or Close Call Search.

Quick Search – Allows you to start searching at the displyed frequency or enter a frequency and start searching.

SAME Weather Alert/Priority – Lets your scanner alert you when a SAME weather alert is transmitted on a NOAA weather channel. You can also set a weather channel as a priority channel.

Built-in Battery Charger (BCD436HP only) – Allows you to charge the rechargeable batteries in the scanner from any USB port.

DIN-E and ISO Vehicle Mountable (BCD536HP Only) – Using the optional DIN-E sleeve or a standard ISO technique, the scanner can be easily mounted in most vehicles.

INCLUDED WITH YOUR SCANNER

Accessories included in the box are:

BCD436HP	BCD536HP
USB Connection Cable	AC Power Adapter
3 X AA NiMH Rechargeable Batteries	Cigarette Lighter Power Cord
microSD card (installed)	USB Connection Cable
Swivel Belt Clip (attached)	microSD card (installed)
SMA-BNC Antenna Adaptor	Wi-Fi Dongle
Rubber Antenna	DC Cord with Orange Wire
	Mounting Bracket with screws and feet
	Telescopic Antenna

BCD436HP

INSTALLING YOUR SCANNER

The BCD536HP can be placed on a convenient surface in your home as a base station, and connected to a standard outlet that supplies 120VAC, 60Hz. You must use either the supplied antenna or an electrically correct outdoor antenna, properly and safely mounted at your chosen site.

The unit can also be placed above, beneath, or in the dash of your vehicle using the supplied bracket and mounting hardware.

- If your scanner receives interference or electrical noise, move the scanner or its antenna away from the source.
- Do not use the scanner in high-moisture environments such as the kitchen or bathroom. Avoid placing the scanner in direct sunlight or near heating elements or vents.

POWER RELATED ISSUES

Important: To prevent memory from being corrupted, do not unplug the AC adapter during the time the memory is accessed for programming or auto store.

Note 1: If when you connect the AC adapter the [VOL] /Power Switch is ON, the scanner may not power on. Should this occur, simply turn the control OFF, then ON again.

Note 2: When you turn off the scanner using the power switch, the scanner remembers the last settings and mode. When you turn power back on, it resumes the previous mode.

CONNECTING AN OPTIONAL ANTENNA

The scanner's BNC connector makes it easy to connect a variety of optional antennas, including an external mobile antenna or outdoor base station antenna.

Note: Always use 50-ohm, RG-58, or RG-8, BNC terminated coaxial cable to connect an outdoor antenna. If the antenna is over 50 feet from the scanner, use RG-8 low-loss dielectric coaxial cable. Cable loss increases with higher frequency.

CONNECTING AN EXTENSION SPEAKER

In a noisy area, an optional amplified extension speaker, positioned in the right place, might provide more comfortable listening. Plug the speaker cables 1/8-inch (3.5-mm) mini-plug into your scanners back-panel Ext. Sp. Jack.

WARNING! If you connect an external speaker to the scanner's Ext. SP jack or headphone jack, never connect the audio output line to a power supply and ground. This might also damage the scanner.
BCD536HP Only - All audio output is Class-D amplified (PWM). Never connect Ext. SP jack or headphone jack to an external Class-D AMP.

BASE STATION

This is the simplest approach to let you get started quickly. Decide on a location that is convenient to a nearby wall outlet, has desk space to let you complete your programming worksheets, will safely allow the indoor antenna to be extended, or near a window to use an outdoor antenna.

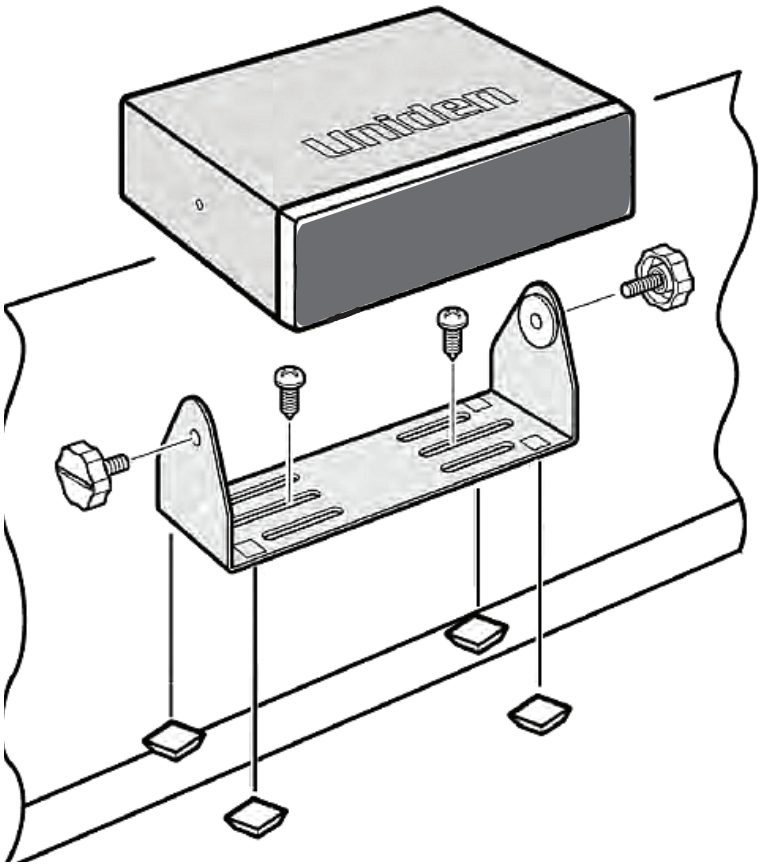

To secure the radio to a surface by means of the mounting bracket, follow the steps below:

1. Attach the four protective mounting feet to the mounting bracket when you casually use the scanner on a flat surface. Should you desire to permanently mount the scanner, remove the feet and use wood screws through the bracket as described in Steps 2 and 3.
2. Use the bracket as a template to mark positions for the two mounting screws.
3. At the marked positions, drill holes slightly smaller than the screws.
4. Align the bracket with the threaded holes on the sides of the radio case so the bracket is beneath the radio. Secure the bracket using the two threaded knobs. Never over tighten the knobs.

Once the radio is positioned, connect it to a source of AC power using the supplied 13.8V, 750 mA AC adapter. Insert the barrel of the AC adapter to the jack on the rear, upper right side of the radio marked. Insert the connector of the supplied indoor telescoping antenna to the BNC Antenna Connector and apply moderate pressure to secure it.

VEHICLE INSTALLATION

You can mount your scanner in your vehicle, using either the supplied bracket or the optional DIN-E sleeve.

If the scanner loses power (as when you turn off your car's ignition with the scanners power switch on), it can corrupt the microSD card. To ensure that does not happen, turn off the scanner before turning the car's ignition off.

WARNING! AVOID AIRBAG DEPLOYMENT ZONES.
Ignoring this installation concern may result in bodily harm and the inability of the airbag to perform properly.

Mounting Using the Bracket

With the bracket removed from the radio, use the holes in the bracket as a template to initially mark the location you plan to use in your vehicle. Be absolutely certain of what might be behind the mounting surface before making any holes, be it above, or below, or in front of your dash, armrest console, or other location. If you drill carelessly, expensive damage can result. If in doubt, consult your vehicle dealer's service department or a qualified professional installer.

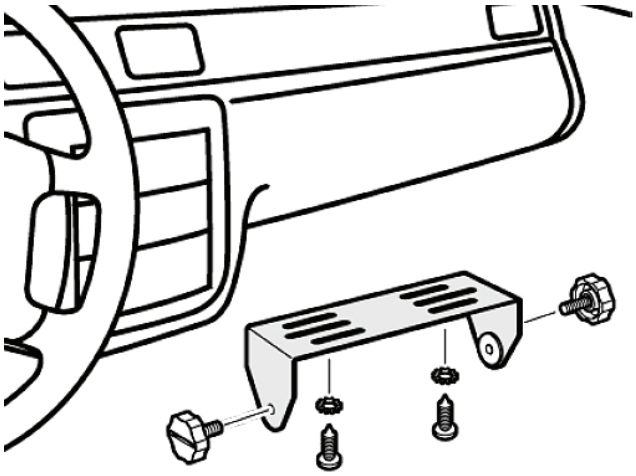

1. Using appropriate screws or other hardware, secure the bracket.
2. Insert the scanner and insert the bracket knobs to lock the scanner in position.
3. Attach the Cigarette Lighter Power Cord to the rear of the scanner and plug the adapter end into a dash mounted 12V DC socket.
4. Attach a suitable mounted mobile antenna to the antenna jack on the back of the scanner.

Mounting Using the DIN-E Sleeve

If you are unsure about how to install your scanner in your vehicle using the optional DIN-E sleeve, consult your automobile manufacturer, dealer, or a qualified installer. Before installing, confirm that your scanner fits in the desired mounting area and you have all the necessary materials to complete the task.

Your scanner requires a 2 x 7-1/8 x 5-5/16 inch (50 x 180 x 135 mm) mounting area. Allow an additional 2-3/8 inch (60mm) space behind the unit for connectors and wires.

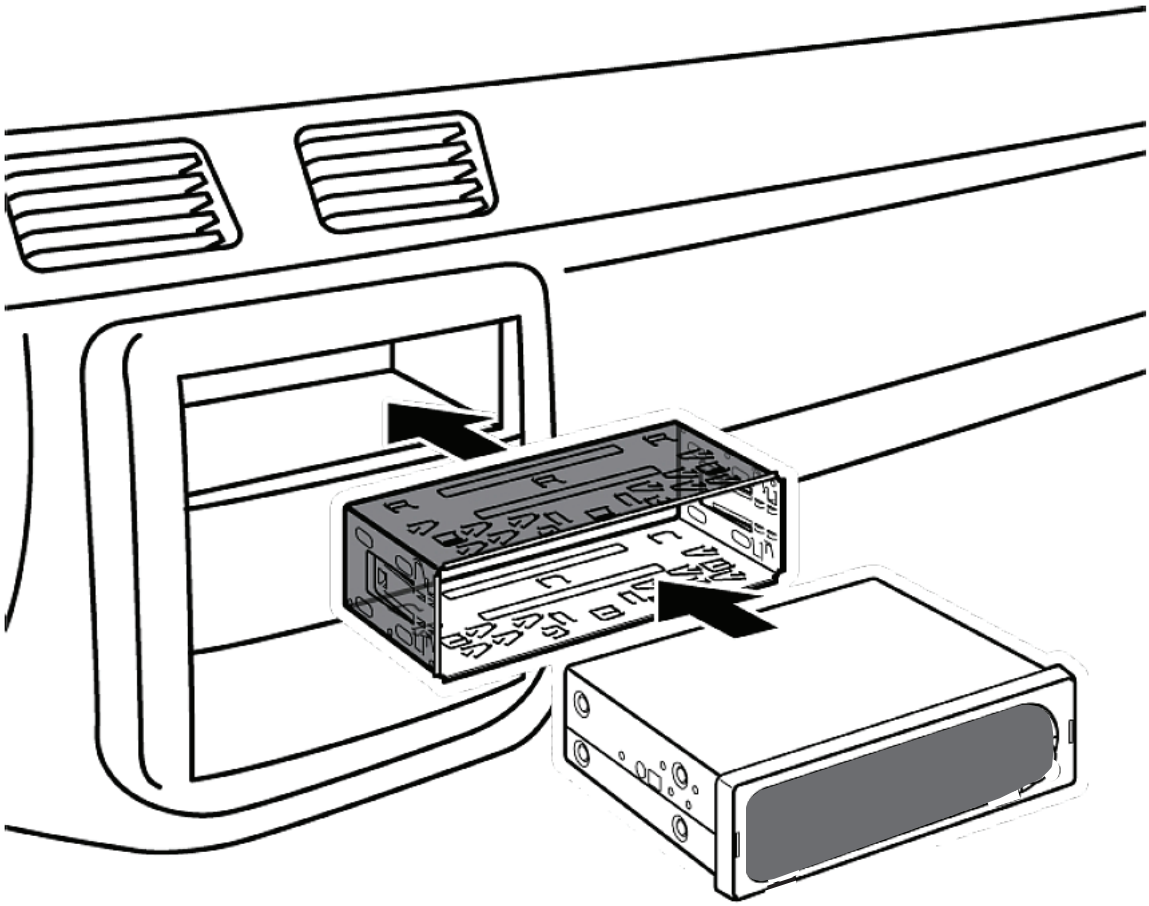

1. Remove the bracket if it is attached.
2. Remove the four Philips screws from four small tabs on the rear of the case that secure the outer metal case and pull off the case (toward the rear) with care.
3. Install the DIN sleeve into the opening in your dashboard, lip facing out.
4. Push out the top and bottom tabs to hold the sleeve firmly in place.
5. Before inserting the scanner in the sleeve, attach the cable from the previously mounted antenna. Attach the DC Power leads. RED goes to a positive (+) connection on your fuse block while BLACK connects to the vehicles chassis ground (-).
6. Connect the ORANGE lead to one side of the headlamp switch so that when you activate the headlights, the scanners LCD display changes intensity. Be sure all the connections are routed away from any potentially pinching or slicing sheet metal.
7. Slowly slide the scanner into the sleeve until it locks in place.
8. To remove the unit, fully insert the removal keys into each slot on the left and right edges of the front panel. Carefully slide the radio from the sleeve.

Removing the Scanner from the DIN-E Sleeve

If you plan to connect other devices or wires to the radio, such as a GPS unit, at a later time, you should plan to remove the scanner from the DIN-E sleeve. This is easily done using the provided Removal Keys that come with the optional DIN-E sleeve.

Refer to the illustration that follows, showing the Removal Keys.

Fully insert both Removal Keys into the slots on the left and the right edges of the radios dress panel. You cannot remove the radio with only one key. Press in fully, and do not twist the keys. The radio will unlock from the sleeve making withdrawal from the sleeve possible. Store the keys in a safe place for future use.

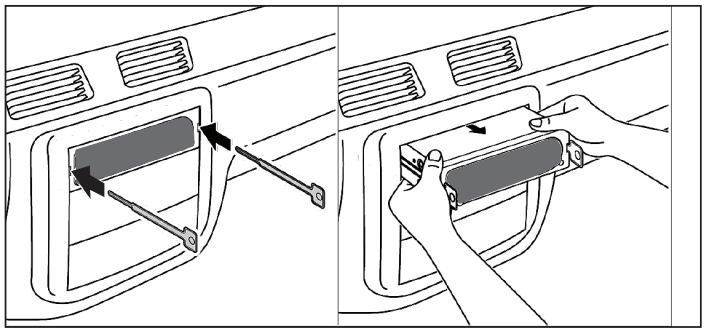

Mounting Using ISO Technique

Some vehicles can take advantage of another approach to mounting a radio in a vehicle, called the ISO technique. However, this technique requires a very detailed and thorough knowledge of the technique. Therefore, we strongly suggest that if you have any doubt about your experience and abilities, please consult with a professional installer who is familiar with the ISO approach to radio installation.

To begin the process, it is first necessary to remove the scanners outer metal sleeve from the inner chassis. Unthread the four screws in the rear of the unit. Slide the cover toward the rear and off. Once the sleeve is removed, you will see threaded, metric machine screw holes on either side of the chassis cabinet. Uniden does not supply these screws. Their diameter, length, and screw type should be chosen by a qualified installer based on the internal vehicle bracket which will be used in securing the scanner chassis.

Once the original radio is removed from the vehicle dash and the fit of the scanner is correct, be sure to connect all the power, audio, antenna, and any other cables or wires, to the scanner before the scanner is secured.

The following illustration is a typical example of the ISO technique and the general side mounting screw holes often encountered. It does not actually represent the Uniden scanner or your vehicle's mounting bracket. Only a professional installer will be able to determine the best and correct approach.

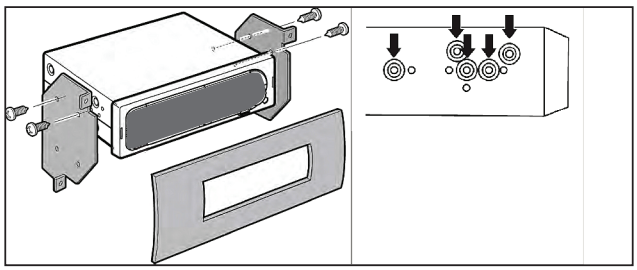

Connecting DC Cable with Orange Wire

Connect this cable to the vehicle's electric system that receives power when you turn on your headlights. Now your scanner's display will automatically dim when you turn on the headlights.

USING INTERNAL BATTERIES (BCD436HP ONLY)

You can power your scanner using three alkaline or rechargeable AA batteries.

There is no switch for the battery type. Using non-rechargeable batteries, select "No" at the **Start Charging?** message when connecting the USB cable.

CAUTION: Never attempt to charge non-rechargeable batteries. Non-rechargeable batteries can get hot or burst if you try to recharge them.

1. Install 3 AA batteries, matching the polarity symbols (+ -).
2. Replace the cover.

When Battery icon flashes and the scanner beeps every 15 seconds, replace or recharge the batteries.

Using Rechargeable Batteries

You can also use three rechargeable batteries to power your scanner. Before you use rechargeable batteries, you must charge them. The scanner has a built-in circuit that lets you recharge batteries while they are in the scanner.

If the USB cable is connected to the scanner, or batteries are installed in the scanner when an USB cable is connected, the scanner will check the battery condition.

When the scanner is turned on, the scanner does not charge the batteries.

When the scanner is turned off, the scanner will charge the batteries.

The scanner displays "Normal Charging" while charging the batteries according to the Set Charge Time setting.

Caution: If the scanner gets too hot while charging, it will turn off automatically.

You can use the USB cable to power the BCD436HP when no batteries are installed. Some features (such as Recording, that records to the microSD card) are disabled when batteries are not installed.

UNDERSTANDING THE MEMORY

All of the information contained in the scanner is stored on a microSD card supplied with the scanner. This includes Favorites Lists, all the radio settings, and the Radio Reference database.

FAVORITES LISTS

Because the memory is based on the Radio Reference database we now have a different order of organization not like banks and channels in traditional scanners, but more like Dynamic Memory Architecture. You can now use Favorites Lists that follow RR database structure of Systems that contain Departments that hold the Channels (conventional frequencies or IDs) and then there are Sites to hold just the trunking frequencies. If you are familiar with DMA (Dynamic Memory Architecture) scanners, think of departments as being like channel groups.

Favorites Lists will allow you to store channels you find when you are scanning from the full database (the easiest way). They can contain channels from trunking systems and conventional systems. You can also manually add systems, (not single sites), departments and channels into

Favorites Lists from the database as well as program new systems, departments, sites, and channels with the Sentinel software.

You can save up to 256 different lists in the scanner (and software) and associate them with any or all of your profiles. You can monitor one or more lists at a time and/or the database. You can also export you lists to a file to share them. Deleting a profile will not delete the lists associated with a profile. However, deleting a Favorites List will delete it from all profiles.

SYSTEMS

Systems will hold all of your Sites, Departments, and Channels.

TRUNKING SITES

Inside systems are trunked sites hold the trunking frequencies for any trunking system and any band plan information needed. You will need at least one site for each trunked system and some systems can have several sites.

DEPARTMENTS

Departments are also created inside systems. Departments hold frequencies (channels) for conventional systems and IDs (also called channels) for trunked systems.

SENTINEL SOFTWARE

MANAGE PROFILES

Profiles are “snapshots” of your scanner’s set up. A profile contains all your configuration settings as well as all of your Favorites Lists, Avoids, and System settings. Sentinel can save multiple profiles so you can also restore different profiles as you need them. For example, If you regularly visit a specific location, you can create a profile for that location. You can save it to Sentinel to use whenever you visit.

MANAGE FAVORITES LISTS

You can create Favorites Lists in Sentinel and then associate them with specific profiles. Sentinel allows you to create your own systems, or edit systems already in a Favorites list. These systems can include information not provided by the weekly database downloads. When those profiles are written to your scanner, only specified Favorites Lists are written to the scanner.

MANAGE DATABASES

Uniden updates the Database used in your scanner every week. You can decide how often you want to update the databases on your scanner. When you update them through Sentinel, it checks the website for the most current database and saves it in Sentinel. When you select *Write to Scanner*, the new database is updated in the scanner.

SHARE FAVORITES LISTS

Create and share Favorites lists with your friends or others in the HomePatrol® Community at http://www.HomePatrol.com and the HomePatrol Twiki site at http://info.uniden.com/HomePatrol for Favorites Lists that cover common services such as Railroad, Marine Radio, Civilian and Military Air bands, and more.

HOW TO INSTALL SENTINEL SOFTWARE

If you have not already installed Sentinel software, follow these procedures.

1. Use the USB cable to connect your scanner to your PC.
2. Turn on the scanner if it is not already on. Select *Mass Storage*.
3. *USB Mass Storage* displays while it is connected to the PC.
4. The microSD card in your scanner will install to your PC like an additional drive.
5. Open the drive folder and Double-click *setup.exe* in the Setup folder.
6. When installation is complete, Sentinel software is installed on your PC.
7. You can now disconnect the USB cable.
8. Sentinel will automatically notify you if a more recent version is available.

UPDATING FIRMWARE

Your scanner updates its firmware through Sentinel. In that process, Sentinel connects to the internet and checks for the current firmware version to download.

From time to time, Uniden will release firmware updates to improve existing functionality, add new features, or address issues found in its operation. Updating the firmware takes just a few minutes and is easily accomplished using the Sentinel Software you installed on your PC.

Simply connect your scanner to your PC using the supplied USB cable and select *Mass Storage*. Then, in Sentinel select *UPDATE/Update Firmware* and follow the on-screen prompts.

For information about what is included in each update, see:

- http://info.uniden.com/UnidenMan4/BCD536HP, or
- http://info.uniden.com/UnidenMan4/BCD436HP.

UPDATING THE DATABASE

1. To update the scanner's database, connect it to your PC using the supplied USB cable. Select *Mass Storage*.
2. Next, in Sentinel, select *UPDATE/Update Master HPDB*.
3. Finally, write the new database to your scanner by selecting *Scanner/Write to Scanner*.

SETTING UP YOUR SCANNER

TURN ON THE SCANNER

BCD436HP

BCD536HP

For Model Number	Procedure
BCD436HP	1. Press and hold ☼/⏻ for about 2 seconds. 2. If the screen is too dark, tap ☼/⏻ to turn on the backlight. 3. Press the scroll control to display the volume level. Turn the scroll control (within 3 seconds) to adjust the volume. 4. Press the scroll control again to close the volume level (or let it disappear after 10 seconds). 5. Press **Func** then press the scroll control to display the squelch level. Turn the scroll control counter-clockwise all the way then clockwise until the noise stops, then one notch more. 6. Press the scroll control again to close the squelch level.
BCD536HP	1. Rotate **VOL** clockwise and set the volume to around 10 o'clock. 2. Rotate the **SQ** knob counter-clockwise all the way, and then rotate the **VOL** knob to find a comfortable volume level. Rotate the **SQ** clockwise until the noise stops, then one notch more.

The first time you turn on your scanner it will prompt you to set the clock. See **Set Clock, page 31.**

To begin scanning right away, press the **Zip** button to select your country and zip/postal code (See Data Naming, page 25, to enter postcode). The scanner will load channels for your area from the database and start scanning.

KEYPAD AND KNOB CONTROLS

BCD536HP

Key	Operation
Power/VOL Light	• Turns the scanner on/off and adjusts the volume. • Press **Func** then Vol to enter/exit P25 Adjustment mode. • Press to toggle backlight intensity.
SQ	• Turn to adjust the squelch. • Press to toggle Close Call modes. • Press and hold to enable Close Call Only mode. • Press **Func** then **SQ** to start Fire Tone-Out Standby Search.
Scroll Control/Function	• Press to enter Function mode for 3 seconds. • Press to select a menu item or save an entry in **Menu** mode. • Turn to select a menu item in **Menu** mode. • Turn to set decode threshold in P25 Adjustment mode. • Turn to select characters with Data Naming. • Turn to select Scan/Search direction and to continue Scan/Search in Scan/Search modes. • Turn to scroll Channels or Frequencies in Hold modes. • Turn in Department Pause to scroll Departments. • Turn in System Pause to scroll Systems. • Turn in Site Pause to scroll Sites in current system. • Turn in Search Pause to select Custom Search Banks to enable in Search mode. • Turn to select next or previous recording in Replay mode. • Turn to resume Close Call search in Close Call Only mode. • Turn to start a Quick Search Hold mode in Close Call Hold mode. • Turn to select next Weather Channel in Weather Scan. • Turn to select Tone-outs in Tone-out Standby/Search mode.

Key	Operation
Avoid	• Press to exit all menus and return to previous mode. • Press to toggle Channel/Frequency Avoid status in Receive/Hold modes. • Press to toggle Avoid status in System, Department, or Site Pause. • Press and hold to clear all System/Site/Department/Channel Avoids in current systems in Scan Hold mode. • Press and hold to clear Search Avoids in Search Hold mode. • Press **Func** then **Avoid** to review all Search Avoids in Search modes. • Press **Func** then **Avoid** to review Avoids in current system in Scan mode.
Zip	Press to enter country and zip/postal codes.
Serv	Press to select Service types.
Rang	Press to select Range.

BCD436HP

Key	Operation
Power/Light/Lock 💡/⏻ 🔒	• Press and hold to turn the scanner on or off. • Press to use the backlight. • Press **Func** then 🔒 to lock or unlock the keypad.
Func (Function)	Press to enter Functin mode for 3 seconds.

Key	Operation
Scroll Control (Volume, Squelch)	• Press then turn to adjust volume level in Scan mode. • Press **Func** then turn *Vol* to adjust the squelch. • Press *Vol* then **Func** then Vol to view P25 Adjustment mode. • Press *Vol* to exit P25 Adjustment mode. • Press to select a menu item or save an entry in **Menu** mode. • Press **Func** then turn to decode threshold in P25 Adjustment mode. • Turn to select characters with Data Naming. • Turn to select Scan/Search direction and to continue Scan/Search in Scan/Search modes. • Turn to scroll Channel or Frequency in Hold mode. • Turn in Department Pause to scroll Departments. • Turn in System Pause to scroll Systems. • Turn in Site Pause to scroll Sites in current system. • Turn in Search Pause to select Custom Search Banks to enable in Search mode. • Turn to select next or previous recording in Replay mode. • Turn to resume Close Call search in Close Call mode. • Turn to start a Quick Search in Close Call Hold mode. • Turn to select next receivable Weather Channel in Weather Scan. • Turn to select Tone-Outs in Tone-Out Standby mode.
Avoid ✦	• Press to exit all menus and return to previous mode. • Press to toggle Channel/Frequency Avoid status in Receive/Hold modes. • Press to toggle Avoid status in System, Department, or Site Pause. • Press and hold to clear all System/Site/Department/Channel Avoids in current systems in Scan Hold mode. • Press and hold to clear Search Avoids in Search Hold mode. • Press **Func** then Avoid to toggle Close Call modes. • Press **Func** then press and hold Avoid to enable Close Call Only mode.
Zip/Services	• Press to enter country-zip/postal code. • Press **Func** then Zip to select Service Types

COMMON CONTROLS (BCD436HP and BCD536HP)

System	• Press **Func** then **System** to start Scan mode. • Press to enter System Pause for 2 seconds then hold on a System in Scan mode. • Double-press **System** for hold without pause in Scan mode. • Double-press to release System Hold. • Press to enter Search Pause ~~mode~~ for 2 seconds then hold on a Search in Search mode. • Double-press for Search Hold without pause in Search mode. • Press to release Search Hold.
Department	• Press to enter Department, pause for 2 seconds, and then hold on a Department in Scan mode. • Double-press **Department** for hold without pause in Scan mode. • Double-press to release Department Hold. • Press to enter Search Pause mode for 2 seconds then hold on a Search in Search mode. • Double-press for Search Hold without pause in Search mode. • Press to release Search Hold. • Press **Func** then Department to hold/release Site in Scan mode.
Channel	• Press to hold/release a Channel, Frequency, CC hit, Tone-Out. • Press **Func** then Channel to toggle Modulation for Channel, Site, or Search, in Hold modes. • Press to pause in Replay mode.
Menu	• Press to enter Menu mode. • Press to return one level in Menu mode. • Press **Func** then **Menu** for Search menu in Search mode. • Press **Func** then **Menu** for Close Call menu in Close Call mode. • Press **Func** then **Menu** for Weather menu in Weather Scan. • Press **Func** then **Menu** for Tone-Out menu in Tone-Out.
Replay/Record	• Press to Replay the last transmissions. • Press **Func** then Replay to start/stop recording • Press and hold to Review Recordings.

Number keys	• Press to select Favorites Lists in Scan mode. • Press 0-9 to use direct entry in Hold mode. • Press 0-9 to toggle custom search bands on or off in Custom Search mode. • Press 0-6 to toggle Close Call bands on or off in Close Call mode. • Press **Func** then 1, 2, or 3 to enable search keys in Hold mode. • Press <4 to move the cursor to the left when editing text. • Press **Func** then 4(ATT) to toggle channel/search/CC attenuation on/off in-Receive/Hold mode. • Press **Func** then press and hold 4(ATT) to toggle Global Attenuation on/off in-Scan Hold mode or Search modes. • Press **Func** then 5( ) to enter Wi-Fi menu (BCD536HP Only). • Press 6> to move the cursor to the right when editing text. • Press **Func** then 6(wx) to toggle Weather Alert Priority in Hold modes. • Press **Func** then press and hold 6(wx) to enter Weather Scan. • Press **Func** then 7(IFX) to toggle intermediate frequency exchange for a channel/frequency in Hold modes. • Press **Func** then press and hold 8(REV) to view the repeater frequency in-Hold mode. • Press **Func** then **9(DISP)** to toggle 3 Line Display mode on/off in BCD536HP or Channel Service Type in BCD436HP in Scan Hold mode. • Press **Func** then 0(LVL) to toggle the volume offset for a channel in Scan Hold mode.
./no/PRI	• Press to enter a decimal point for a frequency. • Press to enter an 'i' when entering an I-Call ID. • Press to delete current character with Data Naming. • Press twice to delete all characters with Data Naming/Direct Entry. • Press twice to enter a hyphen when entering an ID. • Press to cancel Confirm? prompt. • Press **Func** then **./no** to toggle Priority modes in Scan mode.
E/yes Q. SRCH	• Press to select a menu item or save an entry in **Menu** mode • Press to store a blinking CTCSS/DCS/NAC tone in Receive/Hold mode. • Press to store an ID in ID Search mode in Receive/Hold mode. • Press to add channel to Favorites List in Receive/Hold modes. • Press to edit current channel in Receive/Hold modes. • Press to store a Unit ID in Receive/.Hold modes. • Press to 'quick store' a frequency in Search modes. • Press **Func** then **E/yes** to start a Quick Search in Hold mode. • Press **Func** then **E/yes** to toggle ID Search mode on/off in Scan mode (when scanning Trunked System in Favorites List only). • Press to store found tones in Tone-out Search mode. • Press to select the current Tone-Out menu in Tone-Out mode.

SET YOUR LOCATION AND RANGE

Press **Menu** then scroll to Set Your Location and Range and press **E/yes**.

Scroll to through the following option and press **E/yes**.

LOCATION OPTIONS

Enter Zip/Postal Code	**Set Up GPS**	**Edit Location**
Auto Locate	**Set Range**	**Save Location**
Set Manual Location		

Enter Zip/Postal Code – This will set the center of a zip/postal code as your location (not your exact location) and a default scan range of 20 miles.

You can then set the range, edit the location name, and save the location.

Select your country (USA or Canada) and press **E/yes**.

Enter your zip code or see Data Naming, page 25, to enter a post code.

Note: You can also press the ZIP button to tenter your zip/postal code.

Auto Locate – The Auto Locate feature works by trying to monitor any Motorola or P25 system in your area that is also in the Radio Reference Database.

The scanner will then set your location based on the system(s) it receives.

This will set the center of the discovered radio tower as your location (not your exact location) and a default scan range of 30 miles.

You can then set the range, edit the location name, and save the location.

Press **E/yes** or **./no** to accept the location. Press **Menu** to cancel.

Set Manual Location – This will set your exact location and a default scan range of 0 miles. You can then edit the location name and save the location.

Input Latitude. Using the keypad, enter your latitude.

Press **./no** to toggle N or S, and press **E/yes**.

Input Longitude. Using the keypad, enter your longitude.

Press **./no** to toggle E or W, and press **E/yes**.

Set Up GPS – Sets the location format, serial port baud rate, and units.

Location Format

DMS:DDD˚MM'SS.ss or DEG:DDD.dddddd.

Set Serial Port. Default is 4800 bps for GPS device.

Off, 4800, 9600, 19200, 38400, 57600, or 115200 bps.

Set Range – This setting allows you override the default range setting for your current location to increase or decrease the number of Trunking Sites and Channel Departments you can receive when you are scanning from the Full Database and when you are scanning Favorites Lists with Location Control enabled. See also Understanding Range, page 24.

Enter the range (0-50) and press **E/yes**.

Note: (BCD536HP Only) You can also press* RANG *to enter your range.

Edit Location – This allows you to create a location or edit a location for rapid recall.

New Location or Edit Location

Edit Name. See Data Naming, page 25.

Use Location. This will set the location as current for scanning the Database and Favorites Lists with Location Control enabled.

At Confirm? Press **E/yes** or **./no**.

Delete Location. You can only delete saved locations. The last location set will be retained for use when scanning the Database.

At *Confirm Delete?, p*ress **E/yes** or **./no**.

Set Location Information. See Set Manual Location, page 23.

Set Range. Enter the range (0-50) and press **E/yes**.

Save Location – This will save the current location, the range, and set the location as current for scanning the Database and Favorites Lists with Location Control enabled.

See Data Naming, page 25, to name the location.

UNDERSTANDING RANGE

1. The range setting will only work with Favorites Lists that have Location Control set to On and with Departments/Sites that have locations programmed. Everything in the Full Database also has locations programmed. If you manually program Departments/Sites with no location information included, the range setting will have no effect on them because the scanner doesn't know where they are.
2. You will receive Departments/Sites that have a range equal to your scan range setting plus the programmed range of the Departments and Sites. For example, if your scan range is set to 10 miles and a Department/Site range is set to 30 miles, and that Department/Site is less than 40 miles away from your current location setting, it will be enabled in your Favorites List according to both range settings.
3. If you use Add Current dB Channels from a list with a 10 mile range (selected location by zip/postal code) and then set the range to 20 miles, Location Control will not add the other channels included that extra 10 mile range.

SELECTING SERVICE TYPES

Not all service types are enabled when you set your location in the scanner. By default only EMS Dispatch, Fire Dispatch, Law Dispatch, Custom 1, and Multi-Dispatch are enabled.

The Appendix has a list of Service Types and their general descriptions.

(BCD536HP) Press the Serv button.

(BCD436HP) Press **Func** then the Zip/Services button.

Scroll to each Service Type and press **E/yes** to enable or disable.

Press **System** to exit.

When the scanner displays a Service Type that is not in the Favorite Lists, the scanner will display a "**---**" indication.

NAVIGATING THE MENUS

The **Menu** key lets you select options to set up and use the scanner. To select a menu item, rotate the scroll control. Rotate right for down and left for up.

The currently-selected menu item is highlighted and reversed in the display. When the menu item you want to select is highlighted, press **E/yes** or the scroll control to select it. To back up a level, press **Menu**.

To exit all menus and return to the previous mode, press **Avoid**.

DATA NAMING

Name any Favorites List, System, Site, Department, Channel, Location, Custom Search, Recording Session, Tone-Out, or SAME group using up to 64 characters.

To Enter a Character, turn the scroll control until the character you want appears.

To move the cursor to the right, press 6>.

To move the cursor to the left, press <4.

To clear a character, press **./no**.

To clear all characters, press **./no** twice.

Press **E/yes** when finished to exit.

DISPLAY MENU

Press **Menu** and then scroll to Display Options and press **E/yes**.

Scroll to the options below and press **E/yes**.

Set Backlight	**Set ID Format (MOT/P25)**
Adjust Contrast	**Set ID Format (EDCS)**
Disp. Unit ID	**Set Upside-Down (BCD536HP Only)**

Setting the Backlight – The scanner will turn on/off the LCD and the Keypad backlight automatically according to backlight setting.

Set Mode

Note*: (BCD536HP Only) Keypress and Squelch settings will work only when Set Dimmer is Off.*

Squelch

Off - The backlight stays off when the squelch opens.

5 sec - The backlight stays on 5 seconds after the squelch opens.

10 sec - The backlight stays on 10 seconds after the squelch opens.

Open Squelch - The backlight stays on only when the squelch is open.

Keypress

Off - The backlight stays off when any key is pressed.

5 sec - The backlight stays on for 5 seconds when any key is pressed.

10 sec - The backlight stays on for 10 seconds when any key is pressed.

Timeout (BCD436HP Only)

10 sec - Turns the backlight on for 10 seconds when you press ☼/⏻ .

30 sec - Turns the backlight on for 30 seconds when you press ☼/⏻ .

60 sec - Turns the backlight on for 30 seconds when you press ☼/⏻ .

Infinite - The backlight always stays on.

Set Dimmer (BCD436HP Only)

High, Middle, or Low

Set Dimmer (BCD536HP Only)

Manual (For non-vehicle use) - High, Middle, Low, or Off.

Note: You can also toggle the backlight brightness by pressing Vol.

Auto (For vehicle use)

+ Polarity - If the orange wire gets 12V when you turn on the headlights.

- Polarity - If the orange wire is switched to chassis ground when you turn on the headlights.

Adjust Contrast – This setting controls the displays contrast.

Contrast 1-15

Display Unit ID – Allows you view the unit ID of the radio currently transmitting on Motorola, EDACS, and APCO P25 systems. (Default = Off)

On (Unit ID) or **Off**

Note: (BCD436HP Only) This setting toggles Unit ID Display with Channel Service Type.

Set ID Format – Sets the ID display format for the System.

Set ID Format (Mot/P25)

Decimal Format or Hex Format. The default setting is **Decimal**.

Set ID Format (EDACS)

AFS Format or Decimal Format. The default setting is **AFS**.

Set Upside-Down (BCD536HP Only) – This allows you to reverse the display so you can mount the scanner upside-down and hear the speaker from the top. The default setting is **Off**.

On or **Off**

Selecting 3-Line Display Mode

Hold on any channel and press **Func** then **9(DISP)**. Press **Channel** to resume.

3-Line Display Off

3-Line Display On

View the Battery Level (BCD436HP Only)

To view the battery level (in volts) press the scroll control and look at the small numbers in the upper right of the display. Press the scroll control again to close the battery level or let it disappear after 10 seconds.

A Look at the Display

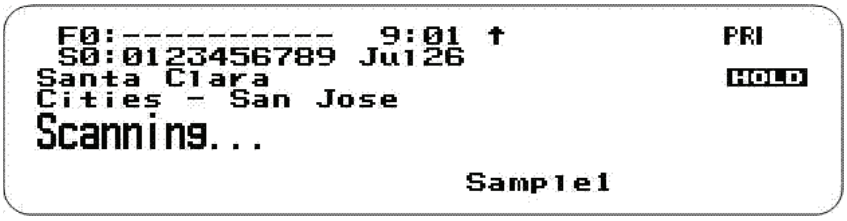

Scan Mode - System Hold

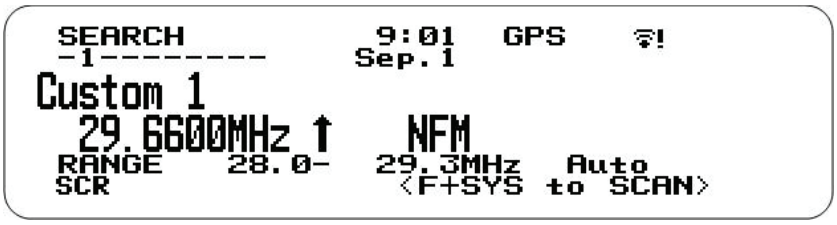

Searching

Volume and Squelch (BCD536HP)

F	Displays to show Function mode.
F0-9	Indicates the first digit of the Favorites List quick key on the left with the blinking second digit on the right in Scan mode. A non-blinking number on the right indicates the quick key is enabled waiting to be scanned. A - (dash) means nothing is enabled for or assigned to the quick key. An * (asterisk) means the quick key is disabled.
SITE HOLD	Displays in Site Hold mode.
SEARCH	Displays in Search mode.

Time	Displays the time.
↑ or ↓	Displays to show the Scan or Search direction.
GPS	Displays when connected to a GPS unit.
REC	Displays when recording.
	Displays to show Wi-Fi status is not connected. (BCD536HP Only)
	Displays to show Wi-Fi status is connected. (BCD536HP Only)
AP	Displays when connected in Access Point mode. (BCD536HP Only)
	Displays to show the signal strength.
PRI	Displays in Priority mode.
PRI	Displays in reverse in Priority DND mode.
	Displays and blinks if the battery is low. (BCD436HP Only)
	Displays if the Close Call Priority feature is on.
	Displays in reverse in Close Call DND mode.
S=NN	Displays the squelch level for three seconds when you turn SQ (BCD536HP Only).
V=NN	Displays the volume level for three seconds when you turn SQ (BCD536HP Only).
V.VV	Displays the battery level (in volts) when you press VOL. (BCD436HP Only)
S0-9	Display the first digit of the current System quick key on the left with the blinking second digit on the right. A non-blinking number on the right indicates the quick key is enabled waiting to be scanned. A - (dash) means nothing is assigned to the quick key. An * (asterisk) means the quick key is disabled. 0-9 displays the Custom Search key status in Search mode.
D09	Displays the Site quick key when you press **Function** in Scan mode (trunked system). Displays the Department quick key when you press **Function** in Receive/Hold modes.
0-9	Displays the Custom Search key status in Search mode.
MMM DD	Displays the Month and Date.
Receive Mode	Displays Modulation for the channel/site in Function mode (BCD536HP Only). Displays Modulation for the channel in Receive/Hold mode (BCD436HP Only).
V+/-N	Displays Volume Offset for the channel in Function mode (BCD536HP Only). Displays Volulme Offset for the channel in Receive/Hold mode (BCD436HP Only).
IFX	Displays if Intermediate Exchange is enabled for the frequency in Receive/Hold modes.
ATT	Displays to show channel attenuation in Receiving/Hold modes. Displays to show search attenuation in Search mode. ATT blinks to indicate global attenuation.

P25	Displays if the channel is receiving digitalized voice in Receive/Hold modes.
PT0	Displays if the channel is receiving Phase II time slot 0 in Receive/Hold modes.
PT1	Displays if the channel is receiving Phase II time slot 1 in Receive/Hold modes.
LNK	Displays when data is received on a voice channel in Receive/Hold modes.
DAT	Displays when data is received on a control channel in Receiving or Hold modes.
ENC	Displays if the channel is receiving encrypted voice and is muted in Receiving or Hold modes.
WX	Displays if the Weather Alert Priority feature is on.
System Name	Displays in Scan/Hold/Receive modes.
Search with Scan	Displays to show the Search with Scan system in Scan/Hold/Receive modes.
Avoid/Hold (System or Department)	Displays System or Department Avoid/Hold status next to system or department name in Hold/Pause modes. Temporary avoids appear reversed - **AVOID**.
Department Name	Displays for a conventional system in Scan/Hold/Receive modes. Displays for a trunked system in Receive/Hold modes.
Custom Search Name	Displays the Custom Search or Close Call Hits department in the Search with Scan system in Scan/Receive/Hold modes.
Site Name	Displays for a trunked system in Scan mode.
Search Frequency	Displays in Search mode.
Modulation	Displays in Search mode.
Scanning	Displays for a conventional system in Scan mode.
ID Scanning/ Searching	Displays for a trunked system in Scan mode.
Channel Name	Displays in Receiving/Hold modes.
Avoid/Hold (Channel)	Displays Channel Avoid/Hold status next to channel name in Hold/Pause modes. Temporary avoids appear reversed - **AVOID**.
P	Displays for a Priority channel in Receiving/Hold modes.
Channel Service Type	Displays in Receiving/Hold modes (BCD536HP only). Displays in Receive/Hold modes with Disp. Unit ID set to Off (BCD436HP only).
TGID	Displays for a trunked site in Receive/Hold modes.
Tone/Code	Displays for a conventional channel in Receiving/Hold modes. Blinking Tone/Code indicates a Tone/Code search. ****** indicates Tone/Code lockout in Hold mode.
Channel Name Avoid/Hold	Displays a channel's Avoid/Hold status. Temporary avoids appear reversed - **AVOID**.
Unit ID	Displays in Receiving/Hold modes for a trunked site with Display Unit ID set to On.
Frequency, Modulation	Display for a conventional channel in Receiving/Hold modes.

Favorites List Name	Displays when scanning any Favorites List in Scan/Hold/Receive modes.
Full Database	Displays when scanning the full database in Scan/Hold/Receive modes.
SCR	Displays if one or more broadcast/custom screen bands are turned on in Search/ Receive modes.
REP	Displays if Repeater Find is enabled in Receiving Search modes.
Tag: NN.NNN.NNN	Displays Favorites List Number Tag info in Function mode (BCD536HP only). Displays Favorites List Number Tag info in Receive/Hold modes (BCD436HP only).

SETTINGS MENU

The Settings menu options let you set up your scanner for basic operations per your personal preferences. For example, you can set up the key beep volume and set the time.

Press **Menu** then scroll to Settings and press **E/yes**.

Scroll to the options below and press **E/yes**.

Adjust Key Beep	**Auto Shutoff**	**Restore Options**
Battery Options (BCD436HP Only)	**Set Clock**	**See Scanner Information**
Band Defaults	**Replay Options**	
Wi-Fi Setup (BCD536HP Only)	**Wi-Fi Options (BCD536HP Only)**	

Adjust Key Beep

Allows you to turn the key beep on or off and adjust the volume level.

Auto sets the alert beep to the master volume level.

Off, **Level 1-15**, or **Auto**

Battery Option (BCD436HP Only)

Set Battery Save. On or **Off**.

Set Charge Time. 1-14 (hours). See also Using Rechargeable Batteries, page 14.

Set Battery Low

Set Alert

Set Alert Tone. Change tone frequency. (640 Hz, 780 Hz, 920 Hz, 1060 Hz, 1200 Hz)

Set Alert Interval. Set to a value between 1 and 60 seconds. (Default is 15 sec.)

Set Alert Volume. 1-15, Off, or Auto. (Default is Auto)

Set Voltage. 3100 - 3400mV. (Default is 3300mV)

Band Defaults

Use this menu to change the default modulation and frequency step or spacing used for each band. See also Default Band Coverage, page 80.

Scroll to each band you wish to edit and press **E/yes**.

Set Modulation

AM, NFM, FM, WFM, or FMB (Broadcast).

Set Step

5, 6.25, 7.5, 8.33, 10, 12.5, 15, 20, 25, 50, or 100 kHz.

Auto Shutoff

Allows you to set the scanner to shut off after a set time.

Off, 5, 10, 15, 30, 45 min, 1, 2, 3 hours.

Set Clock

Sets the clock for the display and the default tag for recordings.

Set Date

Set Year. Enter the year (2013-2099).

Set Month. Enter the month.

Set Day. Enter the day.

Set Time

Set Hour. Enter the Hour (0-23).

Set Minute. Enter the minute.

Set Time Zone

Scroll to your time zone.

Set Daylight Saving

On or Off

Replay Options

This allows you to set the recording duration and delete, replay, or rename recording sessions.

Set Replay Duration

30, 60, 90, 120, 150, 180, 210, or 240 sec.

Review Recordings

Recording Session

Play Session.

Turn the Scroll Control to select recordings.

Press **Channel** to pause/resume replay. Press **Replay** to exit.

Delete Session

At Confirm Delete? Press **E/yes** or **./no**.

Rename Session. See Data Naming, page 25.

Restore Options

Allows you to clear all user data (full reset) or reset just scanner settings to default.

Clear User Data

(Full Reset) will delete all Favorites Lists, locations, reset all profile options to default, clear all Avoids, delete all recording sessions, all discovery logs, and all weather event records.

Note: Pressing and holding 2, 9, and Dept when you power on the scanner will also clear all user data.

Reset User Settings

Will only reset all scanner settings; the Favorites List will be saved.

See Scanner Information

This will show you how much memory is in use, the firmware version, and scanner serial number.

Wi-Fi Setup (BCD536HP Only)

The Wi-Fi dongle allows you to connect to the scanner wirelessly and control your scanner with the Remote software.

The scanner has two different Wi-Fi connection modes - Infrastructure mode and Access Point mode.

Infrastructure Mode is able to connect to an Access Point device.

With this mode, all you need to do is a set a password. In a few cases, there is no password needed with the Access Point unit.

Access Point Mode is able to connect with up to 5 clients.

Setting parameters are as follows: SSID, Security type, and Password.

Wi-Fi Options

Make sure the Wi-Fi dongle is connected to the USB port behind the scanner.

Press **Menu** then scroll to Wi-Fi Setup and press **E/yes**.

Show Wi-Fi Information

Shows the IP address, MAC number, and version when connected.

Shows '**Wi-Fi not connected**' when the Wi-Fi dongle is not connected.

Set Connection

Off. Not connected.

Infrastructure Mode. Routers etc.

Select AP. Select the access point with the encryption type.

Input Password. Input password to connect.

Access Point Mode. Laptops, Smart devices etc.

Input SSID

Enter (or use default) name of connection. See Data Naming, page 25.

Select Security

Open, WPA/WPA2

Input Password. Enter the password for connection.

Reset to Factory

Initialize information for Wi-Fi Setup.

QUICK KEY CONCEPTS

QUICK KEYS

Organizing your Quick Keys will be part of the planning. You will have to figure out which quick keys to assign to your Favorites Lists and Systems so you can scan them without a table of contents and with some sort of logic you can remember. Remember, enabling/disabling quick keys is not the same thing as Avoiding or Unavoiding Systems and Monitor On/Off Favorites Lists.

FAVORITES LIST QUICK KEYS

Favorites Lists Quick Keys are used to enable or disable Favorites Lists for scanning. They are just the number keys on the scanner but once assigned to a Favorites List they become the Quick Keys. Your Favorites Lists hold your Systems that also may have System quick keys assigned

to those Systems. You cannot assign a Quick Key in one Favorites List to another Favorites List. Selecting a Favorites List will enable all (Unavoided) Systems in that list for scanning. There are 100 Quick Keys (0-99) to use for your Favorites Lists. Favorites List Quick Keys can only be assigned once to any one Favorites List, If you don't assign a Quick Key to a list, it will always be enabled.

SYSTEM QUICK KEYS

System Quick Keys are used to enable or disable conventional and trunking systems for scanning. You can assign any quick key to one or more Systems, or program one or more systems with no quick key assigned that will always be scanned unless you Avoid it. There are also 100 Quick Keys (0-99) to use for your Systems.

DEPARTMENT/SITES QUICK KEYS

You also have 100 Department and/or Site Quick Keys to assign to your Sites and Departments within your Systems. You can assign any Quick Key to one or more Departments or Sites, or program one or more Department or Site with no Quick Key assigned that will always be scanned unless you Avoid it.

It is best to assign Quick Keys to everything to easily access your Favorites Lists, System, and Department/Sites. See also Scanning Order (page 49) for Quick Key scanning order.

SEARCH KEYS

You can assign any Search Keys (1, 2, or 3) to any Custom Search range, Tone-Out Search, or Close Call Only Search for quick access to your favorite searches.

PLANNING PROFILES

STARTUP KEYS

You can program each of your Favorites Lists with a Startup Key (0-9) so that when you power up the scanner and press the key number, just those Favorites List(s) assigned to the key will be enabled for scan. Systems are not affected. (See also Using Startup Keys, page 48.)

NUMBER TAGS

Numbers tags will allow you to tag each Favorites List, System, and Channel to locate easier. Number tags can range from 0 to 99 for Favorites Lists and Systems and 0-999 for Channels. You can assign number tags to channels even if the Favorites List does not have a number tag but, without a Favorites List number tag, you can only navigate to these channels while holding or scanning in that Favorites List. See also Using Number Tags, page 56.

ALERTS

You can program your scanner to alert you when, a Channel or Unit ID is received, you receive a Close Call hit, an ID is transmitted with an Emergency Alert or you receive a Tone-out hit. For each alert in the scanner, you can select from 9 different tone patterns, 15 volume settings, 7 colors, and 3 flash patterns.

MANAGING FAVORITES LISTS

Favorites Lists hold all your Systems, Sites, Departments, and Channels. You should assign a Quick Key to every Favorites List to quickly enable or disable the list. You can assign a Favorites List to a Favorites List Quick Key.

NEW FAVORITES LIST/ FAVORITES LIST OPTIONS

Press **Menu** then scroll to Manage Favorites and press **E/yes**.

To Create a New Favorites List, scroll to New Favorites List and press **E/yes**.

To Edit a Favorites List, scroll to the Favorites List and press **E/yes**.

Scroll to the options below and press **E/yes**. (Reformatted table below)

Review/Edit System	**Use Location Control**	**Rename**
Set FL Quick Key	**Review Avoids**	**Delete**
Set FL Number Tag	**Stop All Avoiding**	**Information**
Set FL Startup Key	**Add Current dB Channels**	

Review/Edit System – See Programming Systems, page 35.

Set FL Quick Key – This assigns a quick key to the Favorites List and will scan the list when the key is enabled. The default setting is . (no quick key). If you don't assign a Favorite Lists to a quick key, it will always be scanned unless you turn it off in Select Lists to Monitor. See also Set Scan Selection, page 47.

Scroll to the quick key number (0-99 or . for no quick key) and press **E/yes** to save.

Note: Pressing the first number of a 2-digit quick key will get you closer, 1 for 10, 2 for 20, etc., then scroll to second digit.

Set FL Number Tag – This allows you to number a Favorites List so you can access it quickly from scan hold mode. See also Using Number Tags, page 56.

The default setting is no number tag.

Enter the number tag (0-99) and press **E/yes** to save. Enter a blank for no number tag.

Set FL Startup Key – This allows you to turn on the scanner with the Favorites List enabled for scan. The default settings are all keys Off.

See also Using Startup Keys, page 48.

Scroll to each key (0-9) and press **E/yes** to enable then press **Menu** to save.

Use Location Control – This enables Location Control for the Favorites List. The default setting is Off. See also Understanding Location Control, page 35.

Review Avoids – This allows you to review all Avoids for the Favorites List. Temporary Avoids appear reversed in the display - AVOID . See Scanning, page 50.

Scroll to each Avoided channel, Department, or System, and press **E/yes** to Stop Avoiding.

Stop All Avoiding – This will Stop Avoiding all Channels, Departments, and Systems in the Favorites List.

At Confirm Delete? Press **E/yes** or **./no**.

Add Current dB Channels – This allows you to add all channels you are currently scanning to the Favorites List.

At **Confirm?** Press **E/yes** or **./no**.

Note 1: Any Avoided Channel will not be added.

Note 2: When adding channels from the Full Database, only channels that are inside the set range, and from the selected Service Types are added.

Note 3: When adding channels from a Favorites List that has 'Use Location Control' is set to Yes, only channels that are inside the set range, and from the selected service types are added.

Note 4: When adding channels from a Favorites List that has Use Location Control is set to No, only channels that are from the selected service types are added.

Rename – This allows to you rename the Favorites List.

See Data Naming, page 25.

Delete – This will delete the Favorites List.

At Confirm Delete? Press **E/yes** or **./no**.

Information – This will show you the file size and number of Systems in the list.

UNDERSTANDING LOCATION CONTROL

Location Control allows you to enable or disable channels scanned in a Favorites List based on your location. Actually, it enables/disables Sites and Departments in Favorites Lists (as long as they have locations programmed) based on your current location and scan range settings. Location Control is always enabled when scanning from the Full Database.

To use Location Control, you have to enable it for each Favorites List (default is **OFF**). You also need to have locations programmed for Sites and Departments in each list (you can't program a location for a system).

With Location Control set to **ON**, the scanner only sees Departments/Sites with programmed locations. Any Department/Site with no location information programmed will not be scanned. If you append (add) a System/Department to a list from the database, the locations will be brought in with each System/Department you append.

With Location Control set to **OFF**, the scanner will enable all Sites and Departments in your Favorites List no matter what the scan range or Site/Department range is set to.

You don't need a GPS to scan by location if all of the following apply:

1. You have Location Control set to **ON** for each Favorites List you want to use with Location Control.
2. You set (by zip/post code, Auto Locate, or manually), or select a location.
3. Your Departments and Sites have locations programmed.

The scanner then compares your location data with Site and Department data to determine which channels to scan.

Conceivably, you could program everything you want to hear into one Favorites List and scan just by selecting locations rather than enabling/disabling lists. If you are traveling long distances a GPS device would be a better way to go.

PROGRAMMING SYSTEMS

Note for Motorola/P25 systems: If you are not sure if the system is Motorola or P25, look at the system type in the RR database for your system. Only those systems tagged as "Project 25 Phase I or Project 25 Phase 2" are Project 25 systems. Any system type that

includes the word "Motorola" should be programmed as a Motorola system, even if it uses some or all digital channels.

NEW SYSTEM/SYSTEM SETTINGS

Press **Menu** then scroll to Manage Favorites and press **E/yes**.

Scroll to a Favorites List and press **E/yes**.

Scroll to Review/Edit System and press **E/yes**.

To Create a New System, scroll to New System and press **E/yes**.

Scroll to **P25 Trunk, P25 X2-TDMA**, **P25 One Frequency**, **Motorola**, **EDACS**, **LTR**, or **Conventional** and press **E/yes**.

At **Confirm?** press **E/yes** or **./no**.

To Edit System Settings, scroll to the System and press **E/yes**.

SYSTEM SETTINGS

Edit Name	**Copy System**
Edit Unit IDs	**Edit System**

Edit Name – Enter a name and press **E/yes**. See Data Naming, page 25.

Edit Unit IDs – Unit ID must be set to On in the Display Options menu to view Unit IDs.

New Unit ID/Edit Unit ID

Enter the Unit ID and press **E/yes**.

Edit Name See Data Naming, page 25.

Set Alert Tone

Alert 1-9 or Off.

Set Level

Level 1-15 or Auto (the master volume level).

Set Alert Light

Set Color

Off, Blue, Red, Magenta, Green, Cyan, Yellow, or White.

Set Pattern

On, Slow Blink, or Fast Blink.

Delete Unit ID

At **Confirm Delete?,** press **E/yes** or **./no**.

Copy System – Copying a system will copy all Sites, Departments, Channels, and settings including quick key assignments into the current Favorites List.

See Data Naming, page 25, to name the new system.

Delete System

At **Confirm Delete?,** press **E/yes** or **./no**.

SYSTEM OPTIONS

Press **Menu** then scroll to **Manage Favorites** and press **E/yes**.

Scroll to the **Favorites List** and press **E/yes**.

Scroll to **Review/Edit System** and press **E/yes**.

Scroll to the **System** you want to edit and press **E/yes**.

Scroll to **Edit Sys Option** and press **E/yes**.

Note: Not all options will appear for all types of systems.

Set System Quick Key	**Priority ID Scan**	**Clear All ID Avoids**
Set System Number Tag	**Set Status Bit**	**Set Audio AGC**
Set Avoid	**Set End Code**	**P25 NAC Option**
Set Hold Time	**Emergency Alert**	**P25 Waiting Time**
ID Search	**Review ID Avoids**	**P25 Threshold Mode**
Edit Fleet Map		**P25 Threshold Level**

Set System Quick Key – This assigns a quick key to the System and the scanner will scan the System when the key is enabled. The default setting is . (no quick key). If you don't assign a Quick Key to a system, it will always be scanned unless you Avoid it.

0-99 or **.** for no quick key.

Note: Pressing the first number of a 2-digit quick key will get you closer, 1 for 10, 2 for 20, etc., then scroll to second digit.

Set System Number Tag – This allows you to number a System so you can access it quickly from Scan Hold mode.

The default setting is no number tag. See also Using Number Tags, page 56.

Enter the number **[0-99**, Blank (no number tag)] and press **E/yes** to save.

Set Avoid – This determines whether a System will be scanned or not (even if the system is enabled). Temporary Avoids cancel when you cycle power.

The default setting is **Stop Avoiding**.

Stop Avoiding, **Temporary Avoid**, or **Permanent Avoid**

See also Scan Avoids, page 55.

Set Hold Time – This sets (in seconds) the amount of time the scanner will scan the System before moving on to the next system. All (Unavoided) channels will be scanned at least once regardless of this setting. The scanner moves to the next system after the hold time expires, any current transmission ends, and the channel delay time expires. The default setting is **0** seconds.

Enter the hold time and press **E/yes** to save.

0-255

ID Search – This sets whether the scanner searches for all IDs in a trunking system (**On**), or scans only programmed IDs (**Off**).

The default setting is **Off**. also ID Toggle ID Scan or Search, page 53.

On or **Off**

Edit Fleet Map (Motorola Type I/II systems Only) – This allows you to program a fleet map for Motorola Type I Systems. You must program a system fleet map in order for the scanner to properly track and display talk group IDs.

Block 0 Scroll to the size code (0-14) and press **E/yes**.

The next available block is prompted to select the next size code (0-14).

Repeat for each block as needed (0-7).

Note*: If you select size code 12, 13, or 14, these restrictions apply:*

12 can only be assigned to Blocks 0, 2, 4 or 6.

13 can only be assigned to Blocks 0 and 4.

14 can only be assigned to Block 0.

Since these size codes require multiple blocks, you will be prompted for the next available block. Example: If you assign Block 0 as 12, the scanner prompts you for block 2, the next block available, instead of block 1.

Priority ID Scan (no P25 One Freq) – This allows you to use Priority Scan with IDs in the System. The default setting is **Off**. See also Priority Scanning on page 48.

On or **Off**

Set Status Bit (Motorola Only) – This sets how your scanner works with Status Bits (also called S-bits), letting you control how the scanner interprets and displays Motorola talk group IDs. The default setting is **Ignore**.

Yes. The scanner treats all received IDs as unique IDs.

Ignore. The scanner rounds all received IDs down to the next interval of 16.

Set End Code (Motorola Only) – This sets how the scanner handles the transmission end code sent by most Motorola Systems.

The default setting is **Analog**.

Analog. The scanner recognizes only analog end transmission codes.

Analog+Digital. The scanner recognizes both analog and digital end codes.

Ignore. The scanner waits for the carrier to drop before leaving a channel.

Emergency Alert (Motorola/EDACS Only) – This sets how your scanner alerts you to IDs that have the emergency flag set. The default setting is **Off**.

Set Alert Tone

Alert 1-9 or Off.

Set Level

Level 1-15 or Auto (the master volume level).

Set Alert Light

Set Color

Off, Blue, Red, Magenta, Green, Cyan, Yellow, or White.

Set Pattern

On, Slow Blink, or Fast Blink.

Review ID Avoids – This allows you to review Avoided IDs in the System. Temporary Avoids appear reversed in the display: **AVOID**.

Stop Avoiding?. Scroll to the ID and press **E/yes** to Stop Avoiding.

Nothing Avoided appears if nothing is Avoided.

Clear All ID Avoids – This allows you to Stop Avoiding all Avoided IDs in the System.

At **Confirm?,** press **E/yes** or **./no**.

Nothing Avoided appears if nothing is Avoided.

Set Audio AGC – This allows you to turn AGC (Automatic Gain Control) on or off for the System. The default settings are **Off**.

Analog - Press **E/yes** to toggle **On** or **Off**.

Digital - Press **E/yes** to toggle **On** or **Off**.

P25 NAC Option (P25 One Freq) – This allows you to have the scanner search for NAC codes or you can program a specific code for the System.

The default setting is **Search**.

Search. The scanner opens squelch for any digital signal and displays the NAC being used.

Set P25 NAC. The scanner opens squelch only for signals that include the programmed NAC.

At **Input P25 NAC,** see Data Naming, page 25.

P25 Waiting Time (Conventional Only) – This setting gives the scanner time to determine if channels on Conventional Systems have digital or analog transmissions. During this time, the scanner will evaluate the received signal and, if it detects digital data, will open squelch immediately. If digital is not detected before the delay expires, the scanner will open squelch at the end of this delay. This is to prevent “false decode” problems. This setting only affects conventional channels with an Audio Type set to **All**. The default setting is **400** ms.

0 to **1000**

Note: Any analog transmissions will lose the first part of the transmission, up to the wait time you set here.

P25 Threshold Mode – (Conventional Only)

The default setting is **Auto**.

Auto. Automatically sets the decode threshold based on the received signal.

Manual. Allows you to manually set the threshold in threshold setting mode by using the P25 Threshold Level setting.

Default. Sets the scanner to the default threshold of 8, Auto.

P25 Threshold Level (Conventional Only) – The default setting is **8**.

0 to 20

PROGRAMMING SITES

NEW SITE/SITE OPTIONS

Press **Menu** then scroll to **Manage Favorites** and press **E/yes**.

Scroll to the **Favorites List** you want to manage and press **E/yes**.

Scroll to **Review/Edit System** and press **E/yes**.

Scroll to the **System** you want to edit and press **E/yes**.

Scroll to **Edit Site** and press **E/yes**.

To Create a New Site, scroll to New Site and press **E/yes**.

To Edit an Existing Site, scroll to the Site and press **E/yes**.

Note: Not all options will appear for all sites.

Edit Name	**Set Modulation**	**P25 Threshold Mode**
Set Site Quick Key	**Set Attenuator**	**P25 Threshold Level**
Set Site Type	**Set Avoid**	**Delete Site**
Edit Band Plan	**Set Location Information**	**New Site**

Edit Name

See Data Naming, page 25.

Set Site Quick Key - This assigns a quick key to the Site and the scanner will scan the Site when the key is enabled. The default setting is **.** (no quick key). If you don't assign a quick key to a Site, it will always be scanned unless you Avoid it.

0-99 or **.** for no quick key.

Note: Pressing the first number of a 2-digit quick key will get you closer, 1 for 10, 2 for 20, etc., then scroll to second digit.

Set Site Type (EDACS Only) – EDACS Wide is the same as EDACS Standard and use a 9600 baud control channel. EDACS Narrow-band sites use a 4800 baud control channel.

Wide (Standard) or **Narrow**. The default setting is **Wide**.

Edit Band Plan (Motorola/P25 Only) – Band plans are required so the scanner can correctly determine the voice channel frequencies.

P25 Systems. Explicit mode systems (which comprise most systems in use) include all information needed to determine voice frequencies on the control channel, leave all entries blank. The system will automatically detect the band plan and fill in the entries. Implicit systems need you to supply the systems band plan with the **Custom** option for the scanner to correctly determine voice frequencies.

Select Plan - Scroll to each **Band Plan 0-9**, **A-F**, and press **E/yes**.

Input Base Freq - Enter the base frequency press **E/yes**.

Input Spacing - Enter the step size and press **E/yes**.

Press **Menu** to return and repeat for each band plan as needed.

Motorola Systems

800/900 Standard or **800 Splinter**

The scanner will use the regular Motorola band plan.

Custom (rebanded) Motorola/VHF/UHF Systems. Custom band plans require that you enter both a lower and an upper base frequency value. The lower base frequency (or base) is always the base frequency as provided in the Radio Reference Database.

Use this Excel spreadsheet to calculate the upper base frequency value located at: http://info.uniden.com/twiki/pub/UnidenMan4/CalculatingUpperBaseFrequencies/CustomBandPlanCalculator.xls

If you don't have Excel you can download and install a viewer here, or do a simple Google search.

The upper base frequency can also be found using the Band Plan Calculator located at: http://info.uniden.com/twiki/bin/view/UnidenMan4/CalculatingUpperBaseFrequencies.

Also, look at Determining Base/Step/Offset for VHF/UHF Motorola Systems at Radio Reference.com.

For Standard 800 MHz Rebanded Systems, you need to set Band Plan 1 and Band Plan 2 as follows:

Band Plan	Lower Base Freq	Upper Base Freq	Offset	Polarity	Spacing
1	851.025	854.000	440	+	25 kHz
2	851.0125	868.9875	0	+	25 kHz

Select Plan 1-6 Select for each Band Plan.

Set Base Freq

Input Lower. Enter the lower base frequency and press **E/yes**.

Input Upper. Enter the upper base frequency and press **E/yes**.

Set Offset

Input Offset. Enter the offset and press **E/yes**.

Select Polarity. Scroll to + (default) or - and press **E/yes**.

Set Spacing. Scroll to the step size and press **E/yes**.

Press **Menu** to return and repeat for each band plan as needed.

Set Frequencies – This is where you program trunking frequencies for the Site.

New Frequency/Edit Frequency. Enter the frequency and press **E/yes**.

For EDACS and LTR sites only:

Input LCN. Enter the LCN number and press **E/yes**.

Delete Frequency

At **Confirm Delete?,** press **E/yes** or **./no**.

Set Modulation (no P25/P25 One Freq) – This setting selects the modulation used for the Site. The default setting is **Auto**.

Auto, **NFM**, or **FM**

See also Scanning, page 50.

Set Attenuator – This setting controls whether the scanner attenuates signals on the Site by about 20 dB The default setting is **Off**.

On or **Off**

See also Scanning, page 50.

Set Avoid – This determines whether a Site will be scanned or not. Temporary Avoids cancel when you cycle power. The default setting is **Stop Avoiding**.

Stop Avoiding, Temporary Avoid, or **Permanent Avoid**

See also Scanning, page 50.

Set Location Information – This allows you program a location for the Site to use with Location Control enabled or with a GPS. You can program a circle with a radial range or multiple rectangles as a location.

See Set Up GPS (page 23) first to set your location format and the Baud rate.

Circle

Set Latitude

Enter the latitude. Press **./no** to toggle **N** or **S**, and press **E/yes**.

Set Longitude

Enter the longitude. Press **./no** to toggle **E** or **W**, and press **E/yes**.

Set Range See also Understanding Range, page 24.

0-6000

Rectangles

New Rectangle

Latitude - Top Left

Enter the latitude. Press **./no** to toggle **N** or **S**, and press **E/yes**.

Longitude - Top Left

Enter the longitude. Press **./no** to toggle **E** or **W**, and press **E/yes**.

Latitude - Bottom Right

Enter the latitude. Press **./no** to toggle **N** or **S**, and press **E/yes**.

Longitude - Bottom Right

Enter the longitude. Press **./no** to toggle **E** or **W**, and press **E/yes**.

Stored Rectangle

Edit Rectangle See Rectangles, page 41.

Delete Rectangle

At **Confirm Delete?** press **E/yes** or **./no**.

P25 Waiting Time (Motorola Only) – This setting gives the scanner time to determine if channels on mixed Motorola Systems have digital or analog transmissions. During this time, the scanner will evaluate the received signal and, if it detects digital data, will open squelch immediately. If digital is not detected before the delay expires, the scanner will open squelch at the end of this delay. This is to prevent “false decode” problems. This setting only affects channels with an Audio Type set to **All**. The default setting is **400** ms.

0 to **1000**

Note: Any analog transmissions will lose the first part of the transmission, up to the wait time you set here.

P25 Threshold Mode (P25/Motorola)

The default setting is **Auto**.

Auto. Automatically sets the decode threshold based on the received signal.

Manual. Allows you to manually set the threshold in threshold setting mode by using the P25 Threshold Level setting.

Default. Sets the scanner to the default threshold of 8, Auto.

P25 Threshold Level (P25/Motorola) – The default setting is **8**.

0 to **20**

Delete Site – Deletes the Site.

At **Confirm Delete?** press **E/yes** or **./no**.

New Site – See New Site, page 39.

PROGRAMMING DEPARTMENTS

NEW DEPARTMENT/DEPARTMENT OPTIONS

Press **Menu** then scroll to **Manage Favorites** and press **E/yes**.

Scroll to the **Favorites List** you want to manage and press **E/yes**.

Scroll to **Review/Edit System** and press **E/yes**.

Scroll to the **System** you want to edit and press **E/yes**.

Scroll to **Edit Department** and press **E/yes**.

To Create a New Department, scroll to **New Department** and press **E/yes**.

To Edit an Existing Department, scroll to the **Department** and press **E/yes**.

DEPARTMENT OPTIONS

Edit Name	**Set Location Information**	**Delete Department**
Set Department Quick Key	**Set Avoid**	**New Department**
Edit Channel		

Edit Name

See Data Naming, page 25.

Set Department Quick Key – This assigns a quick key to the Department and the scanner will scan the Department when the key is enabled. The default setting is **.** (no quick key). If you don't assign a quick key to a Department, it will always be scanned unless you Avoid it.

0-99 or **.** for no quick key.

Note: Pressing the first number of a 2-digit quick key will get you closer, 1 for 10, 2 for 20, etc., then scroll to second digit.

Edit Channel

See Channel Options, page 45.

Set Location Information – This allows you program a location for the Department to use with Location Control enabled or with a GPS. You can program a circle with a radial range or multiple rectangles as a location.

See Set Up GPS, page 23, first to set your location format and the baud rate.

Circle

Set Latitude

Enter the latitude. Press **./no** to toggle **N** or **S**, and press **E/yes**.

Set Longitude

Enter the longitude. Press **./no** to toggle **E** or **W**, and press **E/yes**.

Set Range See also Understanding Range, page 24.

0-6000

Rectangles

New Rectangle

Latitude - Top Left

Enter the latitude. Press **./no** to toggle **N** or **S**, and press **E/yes**.

Longitude - Top Left

Enter the longitude. Press **./no** to toggle **E** or **W**, and press **E/yes**.

Latitude - Bottom Right

Enter the latitude. Press **./no** to toggle **N** or **S**, and press **E/yes**.

Longitude - Bottom Right

Enter the longitude. Press **./no** to toggle **E** or **W**, and press **E/yes**.

Stored Rectangle

Edit Rectangle See Rectangles above.

Delete Rectangle

At **Confirm Delete?** press **E/yes** or **./no**.

Set Avoid – This determines whether a Department will be scanned or not. Temporary Avoids cancel when you cycle power.

The default setting is **Stop Avoiding**.

Stop Avoiding, Temporary Avoid, or **Permanent Avoid**

See also Scanning, page 50.

Delete Department – Deletes the Department.

At **Confirm Delete?** press **E/yes** or **./no**.

New Department – See New Department, page 42.

PROGRAMMING FREQUENCIES/TGIDS

QUICKLY STORING A FREQUENCY/TGID

In scan mode, press **Channel** to hold on any channel.

Enter the Frequency or TGID and press **E/yes**. See also Edit Frequency/TGID, page 45.

Note: You can also save any Frequency/TGID in the display by pressing* E/yes*.You have to enter a TGID/frequency in the proper format for the system you are holding on. Example: You can't enter a Motorola Type II TGID when holding on an LTR system.

Quick Save is not allowed for I-Call IDs.

Store a Frequency/TGID into a "Quick Save" Favorites List

At **Quick Freq/TGID Save?**, press **E/yes**.

The scanner will save the Frequency/ TGID in a Favorites List called Quick Save Favorites List in a System called Quick Save System (with no quick keys assigned) in a Department called Quick Save Department.

Store a TGID into a "Quick Save Department" in the Current System

At **Quick TGID Save?**, press **E/yes**.

The scanner will save the ID in a Department called **Quick Save Department** in the current system.

Store a Frequency/TGID into a Current Favorites List

At **Quick Freq/TGID Save?**, press **./no**.

At prompt, press **E/yes**.

At **Select Favorites List,** scroll to the Favorites List where you want to store the Frequecy/TGID and press **E/yes**.

For a new **Favorites List**, see Data Naming, page 25

At **Select System,** scroll to the System where you want to store the Frequency/TGID and press **E/yes**.

At **Select Department**, scroll to the Department where you want to store the Frequency/TGID and press **E/yes**.

After storing the Frequency/TGID, you will be at the Channel Options menu to complete the settings for the new channel. If you don't want to edit the channel settings press **Avoid** to return.

NEW CHANNEL/CHANNEL OPTIONS

Press **Menu** then scroll to **Manage Favorites** and press **E/yes**.

Scroll to the **Favorites List** you want to manage and press **E/yes**.

Scroll to **Review/Edit System** and press **E/yes**.

Scroll to the **System** you want to edit and press **E/yes**.

Scroll to **Edit Department** and press **E/yes**.

Scroll to the **Department** and press **E/yes**.

Scroll to **Edit Channel** and press **E/yes**.

To Create a New Channel, scroll to **New Channel** and press **E/yes**.

At Input **Frequency/TGID,** enter the frequency or TGID and press **E/yes**.

To Edit an Existing Channel, scroll to the **Channel** and press **E/yes**.

CHANNEL OPTIONS

Note: Not all options will appear for all channels.

Edit Name	**Set Attenuator**	**Set Alert**
Edit Frequency or TGID	**Set Service Type**	**Set Avoid**
Set Audio Type	**Set Delay Time**	**Volume Offset**
Set Number Tag	**Set Priority**	**Delete Channel**
Set Modulation		**New Channel**

Edit Name

See Data Naming, page 25.

Edit Frequency or TGID

Enter the frequency or TGID and press **E/yes** to save. See also Entering IDs for Partial IDs, page 82.

To enter a Conventional Frequency, enter the **Frequency** and press **E/yes**.

To enter a Motorola Type II TGID, enter the **TGID** and press **E/yes**.

To enter a Motorola Type I TGID, enter the **Block Number** and **Fleet Number**, press **./no** twice for a hyphen, then enter the **Subfleet** and press **E/yes**.

To enter an EDACS ID in AFS format, enter the **Agency Number**, press **./no** twice for a hyphen, then the **Fleet** and **Subfleet** and press **E/yes**.

-*To enter an EDACS TGID in Decimal format*, enter the **TGID** and press **E/yes**.

To enter a LTR TGID, enter the **Area Code** (**0** or **1**) and press **./no** twice for a hyphen, then enter the **Home Repeater Number** (**01-20**) and press **./no** once, then the **User ID** (**1-254**) and press **E/yes**.

To enter an I-Call ID, press **./no** once then enter the **ID** and press **E/yes**.

To enter a Wildcard I-Call ID, press **./no** once then enter **0** and press **E/yes**.

To enter Hexadecimal IDs, see Data Naming, page 25.

Note: If the channel is already stored in the group TGID or Frequency Exists Accept? (Y/N) appears. Press ./no to return. You can also Avoid wildcard IDs.

Set Audio Type (Conventional/Motorola Only) – Select **All** if this channel might contain both digital and analog signals. If you are sure the channel is analog set the channel to **Analog Only**. This will prevent the P25 Waiting Time for the conventional system from losing the first part of the transmission up to the wait time you set there.

All. The scanner determines whether the audio is analog or digital.

Digital Only. The scanner will receive the channel only if it is carrying APCO 25 digital audio.

P25 NAC Option (Conventional Only)

Search - the scanner searches and displays any NAC tone received.

Set P25 NAC - allows you to program a NAC code. See Data Naming, page 25.

Note: You can also store a (blinking) NAC code when receiving the frequency in scan mode by pressing E/yes.

Analog Only. The scanner will only receive analog audio.

Set CTCSS/DCS (Conventional Only)

Search. The scanner searches and displays any CTCSS or DCS tone.

Note: You can also store a (blinking) CTCSS/DCS tone when receiving a frequency in scan mode by pressing E/yes.

CTCSS. Scroll to the desired CTCSS tone. Press **E/yes** to save.

DCS. Scroll to the desired DCS tone. Press **E/yes** to save.

Set Lockout. Scroll to **CTCSS** or **DCS** and press **E/yes**.

Scroll to the desired tone you want avoided and press **E/yes** to save.

Set Channel Number Tag – This allows you to number a Channel so you can access it quickly from scan hold mode.

The default setting is **no number tag**. See also Using Number Tags, page 56.

0-999, Blank (No number tag)

Set Modulation (Conventional Only) – This setting selects the modulation used for the channel. The default setting is **Auto**.

Auto, **AM**, **FM**, **NFM**, **WFM**, or **FMB** (FM Broadcast)

See also Scanning, page 50.

Set Attenuator (Conventional Only) – This setting controls whether the scanner attenuates signals on the Channel by about 20 dB.

The default setting is **Off**.

On or **Off**

See also Scanning, page 50.

Set Service Type – This sets the Service Type for The Channel.

The Appendix has a list of Service Types and their general descriptions.

Default is **Custom 1**.

Scroll to the Service Type and press **E/yes**.

Set Delay Time – This sets (in seconds) the amount of time the scanner stays on a channel after the transmission has ended before moving to the next channel. A negative delay will force a resume after that number of seconds.

The default setting is **2** seconds.

-10, **-5**, **0**, **1**, **2**, **3**, **4**, **5**, **10**, or **30** sec.

Set Priority – This sets the channel as a priority channel while scanning. The default setting is **Off**.

Note: To use Priority ID Scan you must also enable Priority ID Scan for each System. See also Priority Scanning, page 48***.***

On or **Off**

Set Alert – This setting controls when and how the scanner alerts you if the channel becomes active. The default setting is **Off**.

Set Alert Tone

Alert 1-9 or Off.

Set Level

Level 1-15 or Auto (the master volume level).

Set Alert Light

Set Color

Off, Blue, Red, Magenta, Green, Cyan, Yellow, or White.

Set Pattern

On, Slow Blink, or Fast Blink.

Set Avoid – This determines whether a channel will be scanned or not. Temporary Avoids cancel you cycle power. The default setting is **Stop Avoiding**.

Stop Avoiding, Temporary Avoid, or **Permanent Avoid**

See also Scanning, page 50.

Volume Offset – This sets the Volume Offset for the Channel. See Scanning, page 50.

-3, **-2**, **-1**, **0**, **1**, **2**, or **3**

Delete Channel – Deletes the Channel.

At **Confirm Delete?** press **E/yes** or **./no**.

New Channel – See New Channel, page 44.

SET SCAN SELECTION

Manage Quick Key Status – This is one way to enable or disable your System quick keys and Favorites Lists quick keys. The other way is using the number keys on the keypad. See Selecting Quick Keys, page 51.

Favorites Quick Key

Scroll to each Favorites List quick key and press **E/yes** to enable or disable.

System Quick Key

Scroll to each Favorites List and press **E/yes**.

Favorites List

Scroll to each System quick key and press **E/yes** to enable or disable.

Set Nationwide Systems (Database Only) – This setting enables or disables Nationwide systems in the Database, only when the Database is being scanned.

Scroll to each **Nationwide System** and press **E/yes** to enable or disable.

Select Lists to Monitor – This setting enables or disables your Favorites Lists and the database for scanning. You must first enable each list here, before you can enable the quick key for the list or you will see **Nothing to Scan**.

Note: You will need to set a location to enable the database.

Scroll to the **Full Database**, **Search with Scan**, or each **Favorites List, then** press **E/yes** to enable or disable.

For Search with Scan, see also Search with Scan, page 65, and Edit Custom Search, page 64.

Set All Lists Off/On – These settings turn all Favorites Lists on or off.

Select **Set All Lists Off/On** then press **E/yes** to toggle each setting.

MANAGING FULL DATABASE

Press **Menu** then scroll to **Manage Full Database** and press **E/yes**.

Scroll to the options below and press **E/yes**.

Review Avoids – You can review all Systems, Departments, and Channels that are avoided and stop avoiding each one. See also Scanning, page 50.

Note: The Database must be enabled for scan to review Avoids.

Scroll to each System, Department, or Channel and press **E/yes** to stop avoiding. Temporary Avoids appear reversed in the display - **AVOID** .

Stop All Avoiding – This will stop avoiding all Systems, Departments, and Channels in the Database. See also Scanning, page 50.

At **Confirm Delete?,** press **E/yes** or **./no**.

Information – This will show the database version in the scanner.

USING STARTUP KEYS

TO USE A STARTUP KEY:

1. Turn the scanner off.
2. Press and hold the number key that corresponds to the startup key when you turn the scanner on.
3. Continue holding the number key until the scanner display shows the number of the startup key configuration

When you use Startup Configuration, the scanner checks all Favorites Lists and:

1. Favorites whose Startup Key matches the one the user pressed are changed to Monitor Status **ON**.
2. Favorites whose Startup Key **DOES NOT** match the one the user pressed are changed to Monitor Status **OFF**.

Caution: If you press the wrong key when you press the power key to set your startup configuration, and that wrong key doesn't have any Favorites Lists assigned to that key, you will start up your scanner with all systems Avoided-Nothing to Scan.

PRIORITY SCANNING

Priority Scan – When the scanner is scanning a Conventional System, it interrupts scanning, based on the Priority Interval and Max Channels settings, to check priority channels for activity. The more channels you have set to priority, the longer the interruption will be. The Favorites List(s) and System(s) containing the priority channel(s) have to be enabled (and not Avoided) or the scanner will display **Priority Scan No Channel**.

Priority DND – The scanner checks priority channels, based on the Priority Interval and Max Channels settings, only when not receiving other conventional channels so there is no interruption in scanning with conventional systems.

Priority ID Scan – This function is similar to conventional priority although there is no interruption during the transmission. Priority is checked in between transmissions, when the scanner is receiving the control channel, and during the channel delay period. The scanner can only look for priority IDs in the trunked system it is currently scanning.

Preemptive Priority ID Scanning – For Motorola systems that have channel priority active on the system, if you flag a channel as priority and the system also has that TGID identified as a priority channel, the scanner will preempt any current transmission if the TGID becomes active.

The highest priority is for channels in System Quick Key 0. The lowest priority is for channels in System Quick Key 99. Priority for priority channels in the same channel Department follows the order in which the channels were created.

To use Priority Scan, you must first set your Priority Channels.

To use Priority ID Scan, you must also enable Priority ID Scan for each system.

To Toggle Priority Modes*,* press **Func** then **./no(Pri)**.

Note: Priority is always on for a trunked system if enabled.

PRIORITY SCAN OPTIONS

Press **Menu** then scroll to **Priority Scan** and press **E/yes**.

Set Priority **Set Interval** **MaxChannels/Pri-Scan**

Set Priority – Sets the Priority mode. You can also toggle these modes by holding on any channel in scan mode and pressing **Func** then **./no(Pri)**.

Off - The Priority feature is off.

Priority DND - The scanner checks Priority channels only when not receiving other conventional channels.

PRI appears in the display reversed - **PRI**.

Priority Scan - The scanner checks conventional priority channels.

PRI appears in the display - **PRI** .

Set Interval – This sets (in seconds) how often the scanner will check the priority channels.

1-10 sec.

MaxChannels/Pri-Scan – This sets the maximum number of priority channels that are scanned during one priority scan interrupt. If there are more priority channels than the value you select, the channels are divided into more than one group and the scanner scans each group in turn. Example: If you set the maximum channels to 20 and there are 100 priority channels, the scanner checks those 100 channels in groups of 20 and takes a total of 5 intervals to complete the priority scan.

1-100

SCANNING ORDER

With previous scanners, you selected banks to scan. With this scanner, you select Favorites Lists, Systems, Departments, and Sites to scan by assigning Quick Keys to them.

See also ~~Understanding~~ Quick Key Concepts, page 32.

Scanning is performed with a mixture of FLQK order and SQK order. The scanner will not scan all Systems in one Favorites List and then move to the next List.

For each Favorites List, starting with 0, the scanner will scan each 0 SQK in FLQK order and then move to the next set of SQKs for each list.

Example:

FLQK 0, SQK 0; FLQK 1, SQK 0…. FLQK 98, SQK 99; FLQK 99, SQK, 99.

Department and Site Quick Keys are scanned with each System.

Systems with the same quick key are scanned in order of creation.

The Database is scanned next, in order of creation. Then, Systems with no quick key (including created Quick Save Systems) are scanned and in order of creation.

Conventional Channels and Departments within Systems are also scanned in order of creation.

IDs are not really scanned. The scanner checks for any activity in the trunking system and:

- Will display all IDs when ID Search mode is set to On.
- Will display only programmed IDs when ID Search mode is set to Off.

Next, any Custom Searches (enabled for Search with Scan) are scanned in order (Close Call Hits last).

Then, the scanner scans the Close Call 'Hits with Scan' system (if Unavoided). This is a system that automatically stores the frequencies found by Close Call. If the 'Hits with Scan' system has no frequencies, the scanner will not scan the system.

The scanner scans a system for the duration you set using the System Hold Time option. For trunked systems, the scanner moves to the next system after the hold time expires, the current transmission ends, and the channel delay expires. Conventional systems operate similarly, but all (Unavoided) channels are scanned at least one time regardless of the hold time setting.

SCANNING

Scanning Checklist:

1. You must enable at least one Favorites List or the Full Database in Select Lists to Monitor.
2. Favorites Lists or Systems, with Quick Keys assigned to them, must be enabled with quick keys or through Manage Quick Key Status.
3. Service Types required for channels must be set to On.

Any Favorites List not assigned to a quick key, not Avoided, and set to On in Select – to Monitor will be scanned.

Any System, Department, or Site (or Quick Save System/Department) not assigned to a quick key and not Avoided, will be scanned.

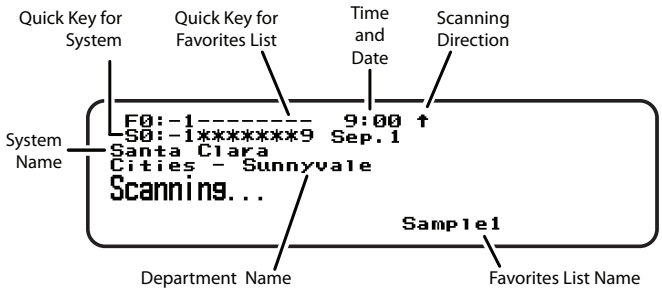

Scan Mode

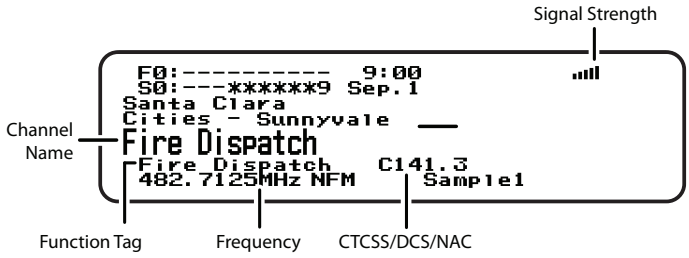

Scan Receive

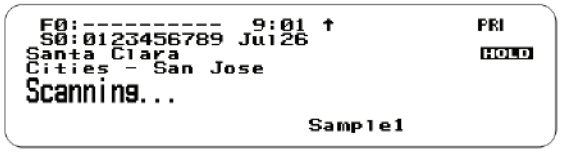

System Hold

Site Hold

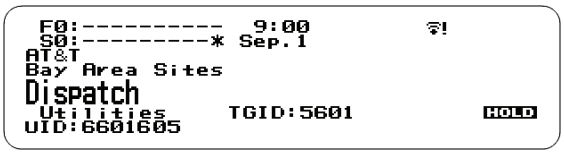

Unit ID Display - Channel Hold

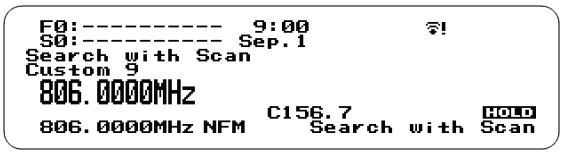

Search with Scan - Frequency Hold

Change Direction or Resume Scan – Turn the Scroll Control.

SELECTING QUICK KEYS

Select a Favorites List Quick Key – Press the number key(s) assigned to the Favorites List then press E/yes. Example: 00, **E/yes** to enable or disable List 0.

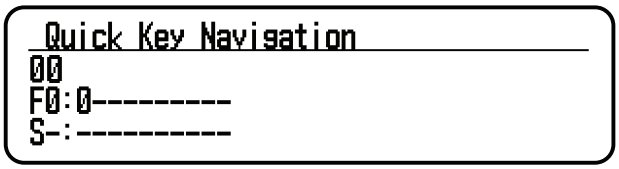

Select a System Quick Key in the Current List – Press **./no**, the number key (2 digits) assigned to the System, then **E/yes**.

Example: **./no**, **03**, **E/yes** to enable or disable System 3.

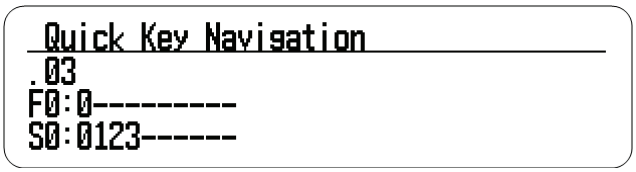

Select a System Quick Key in a Different List – Press the number key(s) assigned to the Favorites List then **./no**, then the number key (2 digits) assigned to the System then **E/yes**.

Example: 00, **./no**, 04, **E/yes** to enable or disable List 0, System 4.

```
Quick Key Navigation
02.04
F0:0---------
S0:012**5*78*
```

Select a Department/Site Quick Key in the Current List – Press **.no**, then the number keys (2 digits) assigned to the System(s), then the number keys (2 digits) assigned to the Department(s) or Site(s).

Example: **.02.04**, **E/yes** toggles all Departments/Sites with QK 4, in all Systems with SQK 2 for the current System.

Select a Department/Site Quick Key in a Different List – Press the number key(s) assigned to the Favorites List then **.no,** the number keys (2 digits) assigned to the System then **.no**, then the number keys (2 digits) assigned to the Department(s) or Site(s) then E/yes.

Example: **1.02.04**, **E/yes** toggles all Departments/Sites with QK 4, in all Systems with SQK 2 for Favorites List 1.

Select a Department/Site Quick Key in the Current System – Press **.no** twice, then the number keys (2 digits) assigned to the Department(s) or Site(s).

Example: **..04**, **E/yes** toggles all Departments and Sites with QK 4 in the current System.

TOGGLE DISPLAY MODES

Hold on any channel and press **Func** then **9(DISP)**. Press **Channel** to resume.

In BCD536HP, you can turn 3-Line Display on and off.

In BCD436HP, you can toggle **Unit ID** display or **Channel Service Type**.

```
F0:----------  9:00
S0:0--------- Jul26
Santa Clara
Cities - Campbell
Police Tac 10
Law Tac                    HOLD
482.2750MHz FM      Sample1
```

3-Line Display Off

```
F0:----------  9:00
S0:0--------- Sample1
Santa Clara
Cities - Campbell
Police Tac 10              HOLD
```

3-Line Display On

TOGGLE ID SCAN OR ID SEARCH

While scanning each Trunked System, press **Func** then **E/yes**.

Note: ID Search is not available with the database.

SELECT SERVICE TYPES

(BCD536HP) Press **Serv**.

(BCD436HP) Press **Func** then **Zip/Services**.

Scroll to each Service Type and press **E/yes** to enable or disable.

HOLDING

Channel Hold

Press **Channel** to hold on a Channel. Scroll to channels.

Press **Channel** to release Hold mode.

Department Hold

Press **Dept** to pause then hold on any Department.

Double press **Dept** to hold without a pause.

Press **Dept** then quickly scroll to the **Department** in pause mode.

Double press **Dept** to release Department hold.

Site Hold

Press **Func** then **Dept** to hold on any Site.

Press **Func** then **Dept** to release Site hold.

Press **Dept** then rotate the scroll control to select a Site.

System Hold

Press **System** to pause then hold on any System.

Double press **System** to hold without a pause.

Press **System** then quickly scroll to the **System** in pause mode.

Double press **System** to release **System** hold.

REPLAY THE LAST TRANSMISSIONS

While scanning, press **Replay**.

Press **Channel** to pause/resume replay.

Turn the **Scroll Control** to select recordings.

NOTE: Replay is not available when recording is enabled. See Replay Options, page 31.

START/STOP RECORDING

While scanning, press **Func** then **Replay**.

Note: Resets to Off when you turn off the scanner. See Replay Options, page 31.

ADVANCED CHANNEL MENU

While the channel is in the display, press **E/yes**.

Edit Current Channel - See Channel Options, page 45.

Add to Favorites List - Press **E/yes** or **./no**.

At **Select Favorites List,** scroll to the Favorites List and press **E/yes**.

Save Sub Audio/P25 NAC - CTCSS Tone or DCS/NAC Code (blinking)

At **Are you sure?,** press **E/yes**.

Save Talk Group ID - Unknown Talk Group ID with ID Search

At **Are you sure?,** press **E/yes** or **.No.**

At **Select Department**, scroll to the Department and press **E/yes**.

For a **New Department**, see **Data Naming**, page 25.

After storing the ID, you will be at the Channel Options menu to complete the settings for the new channel. If you don't want to edit the settings, press **Avoid** to return to scanning.

Save Unit ID - Unknown Unit ID

At **Are you sure?,** press **E/yes** or **.No.**

STORE A SEARCH FREQUENCY (SEARCH WITH SCAN)

Press **E/yes**.

Then see Storing Frequencies, page 67.

Adding Systems From the Database

Press **E/yes** to store a frequency.

ATTENUATION

Channel Attenuation - Press **Channel** to hold on the channel and press **Func** then **4(ATT)** to toggle attenuation.

Global Attenuation - Press **Channel** to hold on any channel then press **Func** then press and hold **4(ATT)** to toggle global attenuation.

MODULATION

Conventional Channel Modulation

Press **Channel** to hold on the channel.

Press **Func** then **Channel(MOD)** to toggle modulation.

Press **Channel** to release hold mode.

Site Modulation

Press **Func** then **Dept** to hold on the Site.

Press **Channel** to hold on any channel.

Press **Func** then **Channel(MOD)** to toggle modulation.

Press **Channel** to release hold mode.

Press **Func** then **Dept** to release Site hold mode.

INTERMEDIATE FREQUENCY EXCHANGE

Press **Channel** to hold on the channel.

Press **Func** then **7(IFX)** to toggle on or off.

REPEATER FREQUENCY CONVENTIONAL CHANNEL

Press **Channel** to hold on the channel.

Press **Func** then press and hold **8(REV)**.

CHANNEL VOLUME OFFSET

Press **Channel** to hold on the channel.

Press **Func** then press **0(LVL)** to toggle.

AVOIDING CHANNELS, DEPARTMENTS, SITES, AND SYSTEMS

Avoids are common to every System in the Favorites List.

Temporary Avoids cancel when you cycle power. See also Review Avoids, page 57.

Channel Avoid When the Channel is in the display or in Channel Hold mode:

To **Temporary Avoid,** press **Avoid** once.

To **Permanent Avoid,** press twice when the channel is in the display or in Channel Hold mode.

Department Avoid

Press **Dept** then **Avoid** *once* to **Temporary Avoid**.

Press **Avoid** twice to **Permanent Avoid**.

Site Avoid When the Site is in the display or in Site Hold mode (Func then Dept):

To **Temporary Avoid,** press **Dept** then quickly press **Avoid.**

To **Permanent Avoid,** press **Dept** then quickly press **Avoid** twice**.**

To **Stop Avoiding,** press **Dept** then **Avoid** once**.**

Press **Func then Dept** to release Site hold**.**

System Avoid

Press **System** then **Avoid** once to **Temporary Avoid**.

Press **Avoid** twice to **Permanent Avoid**.

CHANGE YOUR LOCATION

(BCD536HP) Press the **Zip** button.

(BCD436HP) Press **Zip/Services**.

Select your Country, and enter a zip/postal code. See also Set Your Location, page 23.

SET THE RANGE

(BCD536HP) Press the **Rang** button.

Enter new range using the numeric keys and press **E/yes** to save.

(BCD436HP) See Set Range, page 23.

See also Understanding Range, page 24, and Understanding Location Control, page 35.

DIRECT FREQUENCY/TGID ENTRY

Press **Channel** to hold on any Channel.

Enter the Frequency/TGID and press **E/yes**. Press **Channel** to release hold.

USING NUMBER TAGS

If two Favorites Lists have the same number tag, they will be selected in sequence. The first time you select the number tag, the scanner will go to the first Favorites List assigned to that number tag; if you select the same number tag again, it will go to the 2nd Favorites List assigned to that number tag, and so on. The same rule applies to System and Channel number tags.

View Number Tags

BCD436HP - Number Tag is always displayed in Scan Hold mode.

BCD536HP - Press **Func** in Scan Hold mode..

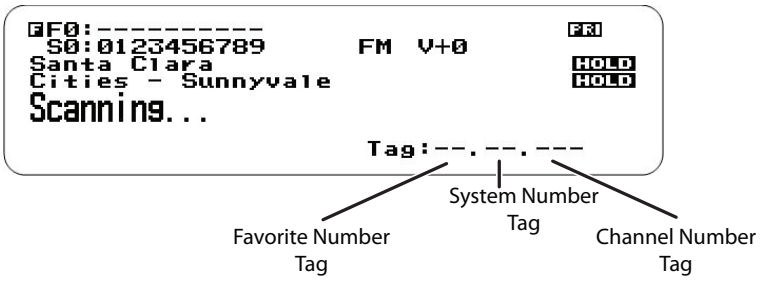

Go To Number Tag (Leading 0s not required)

Press **Channel** to hold on any channel.

Enter the Favorites number tag, **./no**, then the System number tag, **./no**, then the Channel number tag and press **Channel**.

Examples:

1.01.36 to go to Channel 36 in System 01 in Favorites List 1.

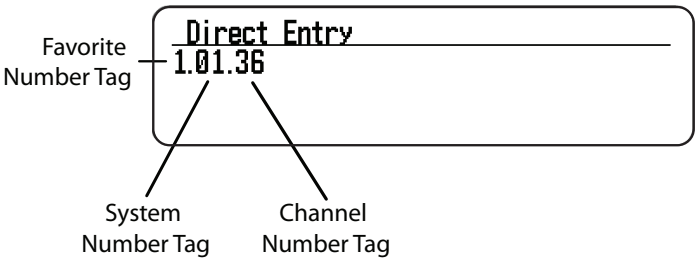

.01.36 to go to Channel 36 in System 01 in current Favorites List.

..36 to go to Channel 36 in current System.

CLOSE CALL MODES

To toggle **CC Off**, **CC DND**, or **CC Pri**:

(BCD536HP) Press **SQ** ( ).

(BCD436HP) Hold on any channel and press **Func** then **Avoid( ).** Press **Channel** to resume.

Close Call Hit

See Using Close Call, page 70.

PRIORITY MODES

Press **Func** then **./no(PRI)** to toggle Priority mode Off, DND, or On.

Weather Alert Priority

Press **Channel** to hold on any channel.

Press **Func** then **6(WX)** to toggle on or off.

CUSTOM SEARCH BY SEARCH KEY

Press **Channel** to hold on any channel.

Press **Func** then 1(SRCH1), 2(SRCH2), or 3(SRCH3), to start a Custom Search, Close Call Only, or Tone-Out Search assigned to a Search Key.

CLOSE CALL ONLY

(BCD536HP) Press and hold **SQ** ( ).

(BCD436HP) Press **Func** then press and hold **Avoid** ( ).

WEATHER SCAN

Press **Channel** to hold on any channel.

Press **Func** then press and hold **6(WX)**.

TONE-OUT STANDBY/SEARCH

(BCD536HP Only)

Press **Func** then **SQ**. (Push **F+FTO**)

(BCD436HP) Assign Tone-Out Standby/Search to a Search Key.

REVIEW AVOIDS

Database Avoids. Press **Menu** and scroll to **Manage Full Database**.

Scroll to the following:

Review Avoids - Scroll to each channel, department, site, or system and press **E/yes** to **Stop Avoiding**. **Temporary Avoids** appear reversed in the display - AVOID .

Stop All Avoiding - At **Confirm?,** press **E/yes** or **./no**.

Favorites List Avoids. Press **Menu** and scroll to **Manage Favorites**.

Scroll to the **Favorites List** and press **E/yes**.

Scroll to the following:

Review Avoids - Scroll to each channel, department, site, or system and press **E/yes** to **Stop Avoiding**. Temporary Avoids appear reversed in the display - AVOID .

Stop All Avoiding - **At Confirm?** press **E/yes** or **./no**.

ID Avoids. Press **Menu** and scroll to **Manage Favorites**.

Scroll to the **Favorites List** and press **E/yes**.

Scroll to **Review/Edit System** and press **E/yes**.

Scroll to the **System** and press **E/yes**.

Scroll to **Edit Sys Options** and press **E/yes**.

Scroll to the following:

Review ID Avoids - Scroll to each ID and press **E/yes** to Stop Avoiding.

Clear All ID Avoids - At Confirm? press **E/yes** or **./no**.

Clear All Avoids for Site or Department – Press **Channel** to hold on any System. Press and hold **Avoid**.

QUICK SEARCH

Press **Func** then **E/yes** to start Quick Search at the current frequency.

P25 ADJUSTMENT MODE

(BCD536HP) Press **Func** then **Vol**. Press **Func** then **Vol** to exit.

(BCD436HP) Press **Vol** then **Func** then **Vol**. Press Vol to exit.

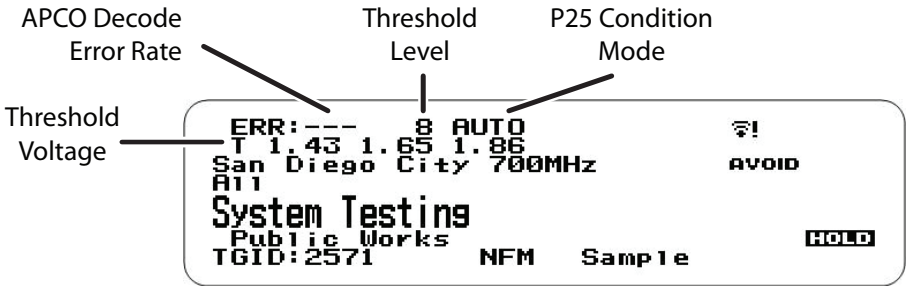

Set the P25 Threshold mode to **Manual** in Site Options or System Options for a Conventional channel.

Press **Func** then **Dept** to hold on a Site or **Channel** to hold on a digital Channel.

The first line on the display now shows the digital error rate and the decode threshold setting (0-20). The second line on the display shows the decode threshold levels for the site.

Allow the scanner to monitor the site or channel for several minutes. The error rate should drop for each transmission and the threshold levels should automatically adjust to a more optimal setting. Then, once the threshold level settles to a stable setting, make a note of the value. This is the site's or channel's optimum decode threshold.

Press **Func** and rotate the **Scroll Control** to set the **MAN** decode threshold start level to a setting that most closely matches the system's optimum decode threshold. Whatever you set at this point will be remembered for this site as the starting point for the auto-tuning function for subsequent transmission on site. See also P25 Threshold Level, page 63.

USING A GPS

LOCATION-BASED SCANNING

You can connect the scanner to a compatible GPS device and set the scanner to automatically Avoid and Unavoid Departments and Sites based on your current location. This frees you from having to manually enable and disable Departments and Sites as you change locations.

For the BCD436HP, use the 4-pin mini plug to connect to the scanner using a NMEA compatible GPS device. The BCD536HP has a 9-pin RS232 male serial connector and you should select a baud rate of (4800 bps) for the serial port.

A good application of this feature would be to set the longitude and latitude for each multi-site system transmitter as usually you can receive at least a handful in any given location. Set the range to around 30 miles and the scanner will automatically Avoid or Unavoid Sites when in and out of range. It may also be relevant to set different locations/ranges for the Departments within the site.

You can find the physical location of antennas using the databases available at Radio Reference or the FCCs Antenna Structure Registration site.

Both sites list the latitude, longitude, and height of the antenna and both sites can map the exact location for you.

Once the scanner completes the initial GPS review, if you move into or out of an area covered by a Site/Department, the scanner will Avoid and Unavoid Sites and Departments according to Range settings for the scanner and Sites/Departments.

If you cycle power, all Sites/Departments are Unavoided until the scanner reacquires the GPS signal and completes the initial GPS review.

Note: If you unplug your GPS device or it loses reception to satellites, the scanner will use the last known location as the current location.

See also Set Location, page 23, to set your Location, Range, and relevant GPS options.

See also Understanding Location Control, page 35, and Understanding Range, page 24.

All Sites/Departments with locations set and not within range of your current location will be *temporarily* Avoided.

DISCOVERY MODE

Trunking Discovery mode allows you to monitor a trunked radio system, logging system channel activity and recording the audio for channels.

Conventional Discovery mode lets you monitor a range of frequencies, logging frequencies with activity and recording the audio for frequencies that are not already known to be in use in your area so that you can more easily identify the users. This includes frequencies used conventionally as well as in trunked radio systems.

In both modes, you also have the option to compare hits to the Database and log all hits or just new hits.

If you use the **Auto Store** option, Discovery will create a new Trunking System for IDs found for each Session or will create a new Conventional System for frequencies found for each Session.

You can create and save several sessions with different settings. Every time you start a session you create a Run that can later be reviewed in the scanner or the Sentinel software.

NEW SESSION

Press **Menu** then scroll to **Discovery** and press **E/yes**.

Scroll to **Trunking Discovery** or **Conventional Discovery** and press **E/yes**.

Scroll to New Session and press **E/yes**.

Conventional Discovery

Input Session Name - Enter the **Name** and press **E/yes**. See Data Naming, page 25.

Trunking Discovery

Input System Name - Enter the first few relevant letters of the system and press **E/yes**. See Data Naming, page 25.

Note: The System must be enabled for scan to input system name.

Select System - Scroll to the **System** and press **E/yes**.

Select Site - Scroll to the **Site** and press **E/yes**.

Input Session Name - Enter the Name and press **E/yes**. See Data Naming, page 25.

SESSION OPTIONS

Press **Menu** then scroll to **Discovery** and press **E/yes**.

Scroll to **Trunking Discovery** or **Conventional Discovery** and press **E/yes**.

Scroll to the **Discovery Session** and press **E/yes**.

Start Discovery	**Set Compare to Database**
Edit Session Name	**Set Record Duration**
Set Limit Frequencies	**Set Time-Out Timer**
Set Modulation	**System Information**
Set Step	**Set Auto Store**
Set Delay	**Delete Session**
Set Logging	**Change System**

Start Discovery

This starts the Discovery Session.

Press **Menu** to stop and review the Run information. See Review Discovery, page 62.

Press **Avoid** to Avoid a hit.

Press **Func** then **System** to exit.

Edit Session Name

This allows you to name a Session.

See Data Naming, page 25.

Set Limit Frequencies (Conventional Only)

This sets the lower and upper frequencies for conventional discovery session.

Set Lower Limit Enter the lower limit.

Set Upper Limit Enter the upper limit.

Set Modulation (Conventional Only)

This sets the modulation for conventional discovery session.

Auto, AM, FM, NFM, WFM, or **FMB** (FM Broadcast)

Set Step (Conventional Only)

This sets the step size for conventional discovery session.

Auto, 5, 6.25, 7.5, 8.33, 10, 12.5, 15, 20, 25, 50, or **100 kHz**

Set Delay

This sets the Delay when monitoring a site or frequencies.

0, 1, 2, 3, 4, or **5** sec.

Set Logging

This will log all hits or just new hits.

All or **New Only**

Set Compare to Database

Select On to compare hits against the channels already in the Database. Only new channels will have audio recorded (if enabled). Select Off to treat all hits as new channels.

On or Off

Set Record Duration

This sets how much audio will be recorded for each new channel.

None, 30, 60, 90, 120, 150, 180, 300, or 600 sec.

Set Time-Out Timer

This is used to keep a stuck channel from stealing the whole Run in a session.

Off, 10, 30, or 60 sec.

System Information (Trunking Only)

This will give you where it came from, (Full Database or Favorites List), the System Type, (Motorola, P25, etc.), and the System used for the Discovery Session.

Set Auto Store

This turns Auto Store on and will create a System called **Conventional** or **Trunking Discovery**.

On or **Off**

Delete Session

This deletes the session.

At **Confirm Delete?** Press **E/yes** or **./no**.

Change System (Trunking Only)

This allows you to create or change the System used and change the Site used for the session.

Input System Name

Press **E/yes** to **Skip** if System is saved.

See Data Naming, page 25.

Select System

Select the **System** to use for the session.

Select Site

Select the **Site** to use for the session.

Conventional Discovery

REVIEW DISCOVERY

In Review Discovery mode, you can review the results of discovery mode runs, resume runs, or restart saved discovery sessions.

Press **Menu** then scroll to **Discovery** and press **E/yes**.

Scroll to **Review Discovery** and press **E/yes**.

Scroll to **Trunking/Conventional Discovery Results** and press **E/yes**.

Scroll to select each **Run**.

Review Run Results

Summary List by each frequency.

Detail - List by each hit.

Restart this Run. Delete all log files.

Restart? Press **E/yes** or **./no**.

Resume this Run Continue without deleting log files.

Resume? Press **E/yes** or **./no**.

Delete this Run

At **Confirm Delete?**, press **E/yes** or **./no**.

Rename this Run

See Data Naming, page 25.

Run Information

Shows the Session settings.

SEARCH/CLOSE CALL OPTIONS

These are the settings you should look at before you perform a Quick Search, or Close Call Search.

Press **Menu**. Scroll to **Srch/CloCall Opt** and press **E/yes**.

Scroll to the options below and press **E/yes**.

Freq Avoids	**Set Delay Time**	**P25 Waiting Time**
Broadcast Screen	**Set Attenuator**	**P25 Threshold Mode**
Repeater Find	**Set Audio AGC**	**P25 Threshold Level**

Freq Avoids – This allows you to review Avoided Frequencies or Stop Avoiding all Frequencies for Searching and Close Call search.

Temporary Avoids appear reversed in the display - **AVOID** .

Stop All Avoiding. See also Avoiding Frequencies, page 66.

At **Confirm?** Press **E/yes** or **./no**.

Rvw Search Avoid

Scroll to Frequency and press **E/yes** to Stop Avoiding.

Broadcast Screen – Automatically ignores transmissions that are on common broadcasts, paging systems, and other annoyance radio sources during Custom Search, Quick Search, or Close Call Search. The default setting is **Pager On**.

Set All Band On/Off. Turns Broadcast Screen **On** or **Off** for All Bands.

Set Each Band

Scroll to each **Band** and press **E/yes** to enable or disable.

Program Band

Band 0-9 Select for each Close Call Band and other searches.

Set Lower Limit - Input the lower frequency limit.

Set Upper Limit - Input the upper frequency limit.

Press **Menu** to return and repeat for each band as needed.

Repeater Find – Sets whether the scanner tries to tune to a repeater output frequency when it detects a transmission on a repeater input frequency, in Search and Close Call modes. Turning this feature on can let you hear both sides of the conversation on the output frequency. The default setting is **Off**.

On or **Off**

Set Delay Time – Determines how long the scanner waits after a transmission ends before resuming Quick Search and Close Call Search operations.

A negative delay will force a resume after that number of seconds.

The default setting is **2** seconds.

-10, -5, 0, 1, 2, 3, 4, 5, 10, or **30** sec.

Set Attenuator – This controls the attenuator for Quick Search, and Close Call operations by about 20dB. The default setting is **Off**.

On or **Off**

See also Search Attenuation, page 66.

Set Audio AGC – This allows you to turn AGC (Automatic Gain Control) on or off for Quick Search and Close Call modes. The default settings are **Off**.

Analog. Press **E/yes** to toggle **On** or **Off**.

Digital. Press **E/yes** to toggle **On** or **Off**.

P25 Waiting Time – This setting gives the scanner time to determine if frequencies have digital or analog transmissions. During this time, the scanner will evaluate the received signal and, if it detects digital data, will open squelch immediately. If digital is not detected before the delay expires, the scanner will open squelch at the end of this delay. This is to prevent “false decode” problems. The default setting is **400** ms.

0 to **1000** ms

Note: Any analog transmissions will lose the first part of the transmission, up to the wait time you set here.

P25 Threshold Mode – The default setting is **Auto**.

Auto. Automatically sets the decode threshold based on the received signal.

Manual. Allows you to manually set the threshold in threshold setting mode or using the P25 Threshold Level setting.

Default. Sets the scanner to the default threshold of **8**, **Auto**.

P25 Threshold Level – The default setting is **8**.

0 to **20**

SEARCH OPTIONS

Press **Menu**. Scroll to Search for... and press **E/yes**.

Scroll to the options below and press **E/yes**.

Custom Search	**Set Search Key**
Edit Custom	**Search with Scan**

IMPORTANT! ***There are many options and setting in Search/Close Call Options that affect and compliment the settings for searching. Please review those first.***

EDIT CUSTOM

You can edit the 10 Custom Search ranges. The default custom search range names appear as **Custom 1**, **Custom 2**, and so on.

Custom 0-9. Select for each Custom Search.

Edit Name. See Data Naming, page 25.

Edit Srch Limit

Set Lower Limit. Enter the lower limit.

Set Upper Limit. Enter the upper limit.

Set Delay Time

-10, -5, 0, 1, 2, 3, 4, 5, 10, or **30** sec.

Set Modulation

Auto, AM, NFM, FM, WFM, or FMB (Broadcast)

Set Attenuator

On or Off

Set Step

Auto, 5, 6.25, 7.5, 8.33, 10, 12.5, 15, 20, 25, 50, or 100 kHz

Set Audio AGC

Analog - Press **E/yes** to toggle **On** or **Off**.

Digital - Press **E/yes** to toggle **On** or **Off**.

P25 Waiting Time. This setting gives the scanner time to determine if the frequencies have digital or analog transmissions. During this time, the scanner will evaluate the received signal and, if it detects digital data, will open squelch immediately. If digital is not detected before the delay expires, the scanner will open squench at the end of this delay. This is to prevent “false decode” problems. The default setting is **400** ms.

0 to 1000 ms

Note: Any analog transmissions will lose the first part of the transmission, up to the wait time you set here.

P25 Threshold Mode

Auto, Manual, Default

P25 Threshold Level

0 to 20

Search with Scan. See also Select Lists to Monitor, page 47, and Search with Scan, page 65.

Set Avoid

Stop Avoiding, Temporary Avoid, or Permanent Avoid

Set Hold Time. Sets how long to search when scanning.

Enter the hold time (0-255 sec.) and press **E/yes** to save.

SET SEARCH KEY

The scanner has three search keys that you can assign to a search range. The search keys are number keys **1**, **2**, and **3**. This allows you to start a Custom, Tone-Out, or Close Call Search without having to go into the menus.

Search Key 1-3. Select a search for each Search Key.

. (nothing assigned), Custom Search 0-9, Tone-Out, or Close Call.

SEARCH WITH SCAN

This is a special system that allows you to include Custom Searches and the “Hits with Scan” department in Scan mode

See also Select Lists to Monitor, page 47, and Edit Custom Search, page 64.

Set System Avoid

Stop Avoiding, Temporary, or Permenant Avoid.

QUICK SEARCH

Allows you to start searching at the displayed frequency, or enter a frequency and start searching from that frequency in hold modes. See also Search/Close Call options, page 62.

Quick Search will search all the way up to 1300 MHz or all the way down to 25 MHz then start over.

To Start a Quick Search from the Displayed Frequency:

Press **Channel** to hold on the channel or frequency.

Press **Func** then **E/yes**. At Quick Search? Press **E/yes**.

Press **Channel** again to release hold mode and start searching.

To Start a Quick Search from a New Frequency:

Press **Channel** to hold on any channel or frequency.

Enter the new frequency then press **Channel** to set the new starting frequency. Press **Channel** again to release hold mode and start searching.

Press **Channel** to hold on any channel or frequency. Enter the new frequency you wish to start at then press **Channel** to set the new starting frequency. Press **Channel** again to release hold mode and start searching.

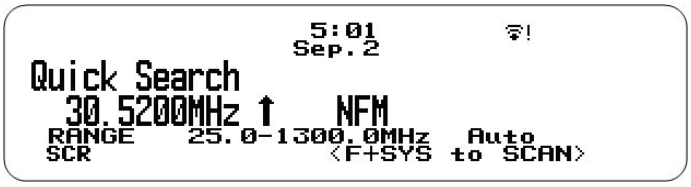

CUSTOM SEARCH

Allows you to search the scanners 10 programmed frequency ranges.

See also Edit Custom Search (page 64).

Press **Menu**. Scroll to **Search for...** and press **E/yes**.

Scroll to **Custom Search** and press **E/yes.**

See also Set Search Key, page 65.

.

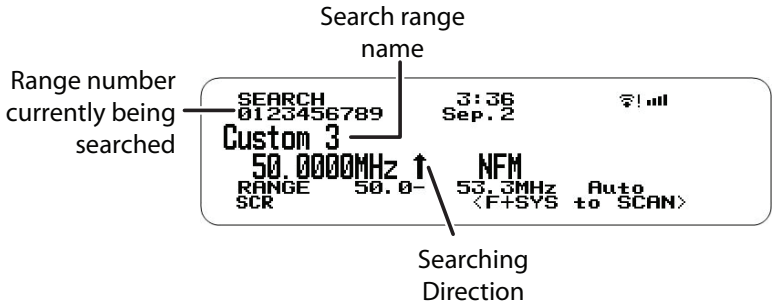

Change Direction or Resume Search

Turn the Scroll Control.

Select Custom Search Bands

Press the number keys to enable or disable each Custom Search band.

Frequency Hold

Press **Channel** to hold on any frequency. You can now Scroll to frequencies.

Press **Channel** to release Hold mode.

Avoiding Frequencies

Avoids are common to all Searches. Temporary Avoids cancel when you cycle power. See also Review Search Avoids, page 67.

To **Temporary Avoid**, press **Avoid**.

To **Permanent Avoid**, press **Avoid** twice.

Search Attenuation

Band Attenuation. Press **Func** then **4(ATT)** for each band.

Global Attenuation. Press **Channel** to hold on any frequency then press and hold **Func** then **4(ATT)** to toggle global attenuation.

Modulation

Press **Func** then **Channel(MOD)** for each band.

Direct Frequency Entry

Press **Channel** to hold on any frequency.

Enter the frequency and press **Channel**.

Press **Channel** to release hold.

Intermediate Frequency Exchange

Press **Channel** to hold on any frequency. Press **Func** then **7(IFX)** to toggle on or off.

View Repeater Frequency

Press **Channel** to hold on any frequency.

Press **Func** then press and hold **8(REV)**.

Replay the Last Transmissions

While searching, press **Replay**.

Press **Channel** to pause/resume replay.

Turn the **Scroll Control** to select recordings.

Start/Stop Recording

While searching, press **Func** then **Replay**.

Note: Resets to Off when you turn off the scanner.

Storing Frequencies

Displayed Frequency into a Quick Save Department – Press **E/yes**.

You will see **Quick Frequency Save** in the display then press **E/yes**.

The scanner stores the frequency into the Quick Save Department in the Quick Save System.

Displayed Frequency into an Existing Department – Press **E/yes**.

You will see **Saving to Quick Dept** in the display then press **./no**.

At **Saving Channel to** scroll to the Favorites List and press **E/yes**.

At **Select System** scroll to the System and press **E/yes**.

At **Select Department** scroll to the and press **E/yes**.

After storing the frequency, you will be at the Edit Channel menu to complete the settings for the new channel.

If you don't want to edit the channel settings or are done editing the channel, press **Avoid** to return to searching.

Search Menu

Press **Func** then **Menu**.

Close Call Modes

To toggle **CC Off**, **CC Pri**, or **CC DND**:

(BCD536HP) Press **SQ( ).**

(BCD436HP) Press **Func** then **Avoid**( ).

Weather Alert Priority Mode

Press **Func** then **6(WX)** to toggle on or off.

Review Search Avoids

You can Review Avoids for all searches including Close Call.

Press **Channel** to hold on any frequency in any Search mode.

Press **Func** then **Avoid** and scroll to select each Frequency.

Temporary Avoids appear reversed in the display - T

Press **Channel** to resume.

Close Call Hit

See Using Close Call, page 70.

Direct Frequency Entry

Press **Channel** to hold on any Frequency

Enter the frequency and press **Channel**. Press **Func** then **System** to exit.

Clear All Search Avoids

Press **Channel** to hold on any Frequency in any Search mode.

Press and hold **Avoid**. See also **Freq Avoids**, page 62.

CLOSE CALL

Your scanner's Close Call feature lets you set the scanner so it detects, alerts you to, and displays the frequency of a nearby strong radio transmission. You can set the scanner so the Close Call feature checks for a Close Call hit every 2 seconds in the background while you are scanning, searching, listening to the weather frequency, etc. or use Close Call Only mode. Close Call 'Do-Not-Disturb' will only check for close call signals when you are not receiving transmissions. You can also select the frequency band(s) to look for transmissions. When the scanner detects a Close Call hit, it alerts you according to the alert settings.

'Hits with Scan' is a special system that automatically stores the last 10 Close Call hits until you cycle power.

The Close Call feature works well for locating the source of strong local transmissions such as mobile and handheld two-way radios in areas with no other strong transmission sources. Performance is increased with higher transmit power, a receive antenna tuned to the target band, and a low background RF level.

The Close Call feature works better with some types of transmissions than others.

It might not correctly display frequency information for transmitters using a highly directional antenna (such as an amateur radio beam antenna) or if there are many transmitters operating at the same time in the same area.

CLOSE CALL OPTIONS

Important! There are many options and settings in Search/Close Call Options that affect and compliment the settings for Close Call. Please review those first.

Note: Close Call does not operate in Weather Scan or Tone-Out Standby/Search.

Press **Menu**. Scroll to **Close Call** and press **E/yes**.

Scroll to the options below and press **E/yes**.

Close Call Only	**Set CC Alert**
Hits with Scan	**Set Alert Tone**
Set CC Mode	**Set Alert Light**
Set CC Bands	**Set CC Pause**

Close Call Only

This setting puts the scanner in Close Call Only mode.

See also Using Close Call, page 70.

You can also toggle these modes by:

BCD435HP: Holding on any channel and pressing **Func** then **Avoid** ( ).

BCD536HP: Pressing **SQ** ( ).

Hits with Scan

This is a special system that automatically stores the last 10 close call hits and allows you to scan them. Accessible only in the Close Call menu, the system has to be Unavoided to view while scanning (default is Permanent Avoid). The scanner will delete the frequencies in this system when you turn the power off.

Set Avoid

Stop Avoiding, Temporary, or Permanent Avoid

Set Hold Time. Sets how long to search when scanning.

Enter the hold time (0-255 sec.) and press **E/yes** to save.

Set CC Mode

Selects the Close Call mode when scanning or searching.

Off. Close Call is turned off.

CC DND. Close Call checks for frequencies every two seconds when the scanner is not receiving a transmission.

CC Priority. Close Call checks for frequencies every two seconds.

You can also toggle these modes by:

(BCD536HP) Pressing **SQ** ( ).

(BCD436HP) Holding on any channel and pressing **Func** then **Avoid (** **)**.

Set CC Bands

Lets you select the Close Call bands to be searched.

Scroll to each **Band** and press **E/yes** to toggle **On** or **Off**.

Press **Menu** to return.

VHF Low 1 - 25-54 MHz	**VHF High2** - 225-320 MHz
VHF Low 2 - 54-108 MHz	**UHF** - 320-512 MHz
Air Band - 108-137 MHz	**800MHz+** - 758-960, 1240-1300 MHz
VHF High1 - 137-225 MHz	(Cellular frequencies not scanned)

Set CC Alert

This allows you to set an Alert Tone, Alert Light, and sets the Pause time for Close Call when you receive a hit.

Set Alert Tone

Alert 1-9 or Off.

Set Level

Level 1-15 or Auto (the master volume level).

Set Alert Light

Set Color

Off, Blue, Red, Magenta, Green, Cyan, Yellow, or White.

Set Pattern

On, Slow Blink, or Fast Blink.

Set CC Pause

3, 5, 10, 15, 30, 45, 60, sec. or Infinite.

USING CLOSE CALL

(BCD536HP) Press and hold **SQ** ( ).

(BCD436HP) Press **Channel** to hold on any channel/frequency.

Press **Func** then press and hold **Avoid** ( ) . See also Set Search Key, page 65.

You will see activity on the 7 bands in the display. Bands with an * (asterisk) under them are turned off.

When the scanner detects a Close Call signal, **CC Found!** and **Press Any Key** display for the length of time set in Close Call Pause.

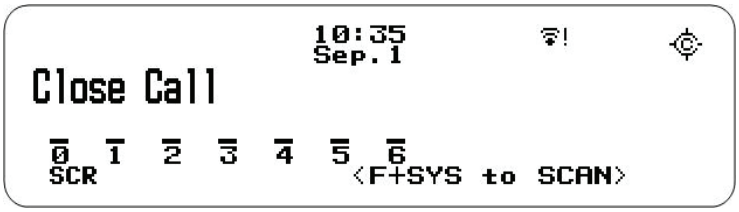

Close Call Only Mode

Toggle Close Call Bands

Press the number keys to enable or disable each Close Call band.

Cancel a Hit

Turn the **Scroll Control**.

Holding on a Hit

Press **System**, **Department**, or **Channel** to hold on the Close Call Hit.

Press **Channel** to cancel hold.

View Last Hit

Press **System**, **Department**, or **Channel** to recall the last hit.

Press **Channel** to cancel hold.

Avoiding Hits

Avoids are common to all searches. Temporary Avoids cancel when you cycle power. See also Review Search Avoids, page 67.

To **Temporary Avoid**, press **Channel** to Hold, then **Avoid**.

To **Permanent Avoid**, press **Channel** to Hold, then **Avoid** twice**.**

Press **Channel** to cancel Hold.

Press quickly to toggle **Permanent Avoid** and **Stop Avoiding** when the frequency is in the display or in Search Hold mode.

Store a Hit

Press **Channel** to hold on the hit. Then, see **Storing Frequencies**, page 67**.**

Close Call Attenuation

Band Attenuation - Press **Func** then **4 (ATT)** for each band.

Global Attenuation - Press **Func** then press and hold **4(ATT)** for each band.

ATT blinks in the display when global attenuation is on.

Review Avoids

Press **Channel** to hold on any Frequency.

Press **Func** then **Avoid**. Scroll to each frequency and press **E/yes** to **Stop Avoiding**. Temporary Avoids appear reversed in the display - **T** .

Clear All Avoids

Press **Channel** to hold on any Frequency.

Press and hold **Avoid**. The scanner displays Search Frequencies All Unavoided.

Close Call Hit

Attenuation

Press **Func** then **4(ATT)** for all bands.

Modulation

Press **Func** then **Channel (MOD)** for all bands.

Intermediate Frequency Exchange

Press **Channel** to hold on any frequency.

Press **Func** then **7(IFX)** to toggle on or off.

Press **Channel** to resume.

View Repeater Frequency

Press **Channel** to hold on any frequency.

Press **Func** then press and hold **8(REV)**.

Replay the Last Transmissions

Press **Replay**.

Turn the **Scroll Control** to select recordings.

Press **Channel** to pause/resume replay.

Note: Replay is not available when recording is enabled. See also Replay Options, page 31.

Start/Stop Recording

Press **Func** then **Replay**.

Note: Resets to Off when you turn off the scanner.

Storing

Displayed Frequency into a Quick Save Department. Press **E/yes**.

You will see **Saving to Quick Save Department** in the display then press **E/yes**.

The scanner stores the frequency into the **Quick Save Department**.

Displayed Frequency into an Existing Department Press **E/yes**.

You will see **Saving to Quick Save Department** in the display, then press **./no**.

At **Select Department**, scroll to the department where you want to store the frequency and press **E/yes**.

After storing the frequency, you will be at the Edit Channel menu to complete the settings for the new channel.

If you don't want to edit the channel settings or are done editing the channel, press **Avoid** to return to searching.

Quick Search at Current Frequency

Press **Channel** to hold on the frequency.

Press **Func** then **E/yes**. At **Quick Search?**, press **E/yes**.

Press **Channel** again to release Hold mode and start searching.

Weather Alert Priority Mode

Press **Func** then **6(WX)** to toggle on or off.

Close Call Menu

Press **Func** then **Menu**.

WEATHER OPERATION

WEATHER OPTIONS

Press **Menu**. Scroll to WX Operation and press **E/yes**.

Scroll to the options below and press **E/yes**.

Set Delay Time	**WX Alt Priority**
Set Attenuator	**Weather Scan**
Set Audio AGC	**Weather Alert**
Program SAME	**Review WX Alerts**

Set Delay Time

Sets the number of seconds the scanner should wait after a transmission stops before moving on to the next channel during weather scan.

A negative delay will force a resume after that number of seconds.

The default setting is **2** seconds.

-10, -5, 0, 1, 2, 3, 4, 5, 10, or **30** sec.

Set Attenuator

Sets the attenuator (20 dB) for weather operation.

The default setting is **Off**.

On or **Off**

Set Audio AGC

This allows you to turn AGC (Automatic Gain Control) on or off for Weather operations.

The default setting is **Off**.

Analog - Press **E/yes** to toggle **On** or **Off**.

Program SAME

SAME (Specific Area Messaging System) is a system developed by the National Weather Service to reduce the number of alerts received by consumers by allowing them to hear alerts only for the county(ies) they are interested in. Each alert contains information about the type and severity of the alert, as well as the specific geographic locations affected by the alert.

To receive SAME alerts, you can program up to **5 groups of 8 FIPS codes** (40 codes) into the scanners memory.

To find the FIPS codes for your scanner call the NWS toll free at 1-888-697-7263 (follow the instructions you hear) or refer to http://www.nws.noaa.gov/nwr/indexnw.htm for the United States and its Possessions.

SAME 0-4 Select for each SAME group.

Edit Name. See Data Naming, page 25.

Edit County

Code 1-8. Select for each FIP code.

Enter the FIPS code and press **E/yes** to save.

Weather Alert Priority

Turning the weather alert priority feature on allows the scanner to check the weather channels every 5 seconds for a 1050 Hz weather alert signal and still scan or search. If you should receive an alert, you will hear a loud warbling then the weather channel audio.

On or **Off**

Note: You can also toggle weather alert priority in scan or search modes by holding on any channel and pressing Func then 6(wx).

Weather Scan

Press **Channel** to hold on any channel/frequency. Press **Func** then press and hold **6(WX)**.

You can also start Weather Scan from the WX Operation menu.

The scanner starts scanning the preprogrammed weather frequencies and stops on the first good signal. If the signal is lost, the scanner resumes searching for another weather transmission.

Note: Weather Alert and SAME Weather alert do not function in Weather Scan.

Change Channel

Turn the **Scroll Control**.

Attenuation

Press **Func** then **4(ATT)**.

Intermediate Frequency Exchange

Press **Channel** to hold on any frequency. Press **Func** then **7(IFX)** to toggle on or off.

Replay the Last Transmissions

Recording starts when the scanner receives an Alert in Weather Alert.

Press **Replay**.

Press **Channel** to pause/resume replay.

Turn the **Scroll Control** to select recordings.

Quick Search

Press **Func** then **E/yes** to start Quick Search at the current frequency.

Weather Menu

Press **Func** then **Menu**.

WEATHER ALERT

This setting turns on weather alert and determines which types of signals will trigger an alert. See also Program SAME, page 73.

Press **Channel** to hold on any channel/frequency.

Press **Func** and then press and hold **6(WX)**. Press **Func** then **Menu**.

Scroll to **Weather Alert** and press **E/yes**.

Alert Only - The scanner will scan all the weather channels and immediately sound a weather alert siren when it detects the 1050 Hz weather alert tone. Press any key to stop the siren which opens the squelch and the scanner remains on the weather channel.

SAME 0-4 - The scanner sounds a weather alert siren for any programmed countries. The scanner displays warning level as "**Warning WX**", "**Watch WX**" or "**Advisory WX**" and it displays decoded Event Code.

When an alert is received, press any key to listen to the alert.

All FIPS - The scanner sounds a weather alert siren for any county.

The scanner displays warning level as "**Warning WX,**" "**Watch WX**" or "**Advisory WX**" and it displays decoded Event Code.

When an alert is received, press any key to listen to the alert.

The scanner will mute and scan only the weather channels.

WARNING! ***If you receive an alert it will be at FULL volume.***

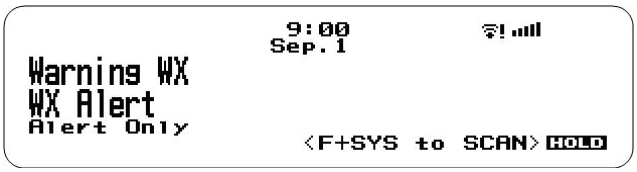

Weather Alert

Weather Warning

Review WX Alerts

Replay and review WX/SAME alert event results. The scanner drops these alert events after the alert time expires.

Weather alerts are always recorded and you can review the alerts in the WX Operations menu by scrolling to Review WX Alerts.

FIRE TONE-OUT

Fire Tone-Out will monitor up to 32 different channels for paging tones (two-tone sequential, single tone, and group tone).

Tone-Out Standby Mode is used if you use programmed tones.

Tone-Out Search Mode is used if you don't know the tones.

All tone-outs (channels) that have the same frequency (and modulation and attenuation) as the one you select will also (and only) be monitored so you can monitor up to 32 tone-out channels for one frequency.

In this case, the scanner displays each tone-out channel for two seconds. It does not scan them; tone-out monitors the frequency for all tone-out channels with the same frequency.

Regardless of the current display, the scanner will alert on any received tone out that matches a stored setting (channel) for the frequency.

Note: Tone-Out Search Mode will not display each Tone-Out channel for two seconds, even when multiple channels have the same frequency, modulation and attenuator settings with other channels.

TONE-OUT SETUP

Press **Menu**. Scroll to **Tone-Out for...** and press **E/yes**.

Scroll to **Tone-Out Setup** and press **E/yes**.

Scroll to **Tone-Out (0-31)** and press **E/yes**.

Note: Close Call DND/Pri and Weather Alert Priority do not operate in this mode.

Edit Name	**Start Delay Time**
Set Frequency	**Set Alert**
Set Tone	**Set Audio AGC**

Edit Name

See Data Naming, page 25.

Set Frequency

Edit Frequency

Enter the frequency and press **E/yes**.

Set Modulation

Auto, NFM, FM

Set Attenuator

On or Off

Set Tone

Edit Tone A and press **E/yes**. Enter the tone and press **E/yes** to save.

Edit Tone B and press **E/yes**. Enter the tone and press **E/yes** to save.

Press **Menu** to return.

For two-tone pages, enter the tones (in Hz) for tone A and tone B.

For one-tone pages using short tones between 1.25 and 3.75 seconds, enter tone for tone A, and 0 for tone B.

For **long-tone pages**, such as group pages of more than 3.75 seconds, enter 0 for tone A, and the **tone** for B.

To search for tones, leave the tones for A and B at **0**.

Set Delay Time

0 - the scanner resumes standby as soon as the carrier drops after a page.

1, 2, 3, 4, 5, 10, 30 - (seconds): the scanner resumes standby mode after the carrier drops and the selected time expires.

Infinite - you must press **Hold** after a page to resume standby mode.

Set Alert

Set Alert Tone

Alert 1-9 or Off.

Set Level

Level 1-15 or Auto (the master volume level).

Set Alert Light

Set Color

Off, Blue, Red, Magenta, Green, Cyan, Yellow, or White.

Set Pattern

On, Slow Blink, or Fast Blink.

Set Audio AGC

This allows you to turn AGC (Automatic Gain Control) on or off for Tone-Out operations. The default setting is **Off**.

Analog - Press **E/yes** to toggle **On** or **Off**.

FIRE TONE-OUT STANDBY/SEARCH

Press **Menu**. Scroll to **Tone-Out for...** and press **E/yes**.

Scroll to **Tone-Out Standby** and press **E/yes**.

(BCD536HP Only) press **FUNC** then **SQ**.

See also Set Search Key, page 65.

Scroll to monitor a Tone-Out channel (**0-31**).

Press **Func** then **System** to exit.

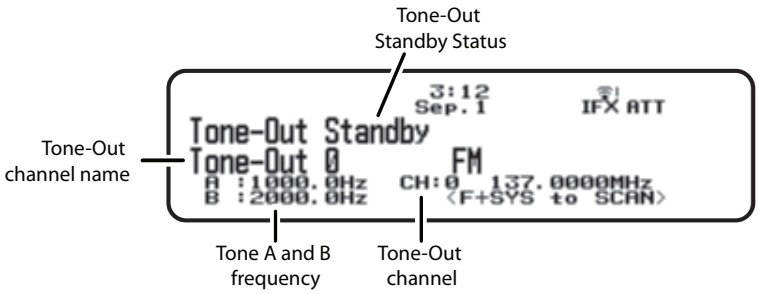

Tone-Out Standby Mode

Any transmission received on the frequency will not be heard but you will still see the signal strength bars.

To monitor a different frequency, scroll to a tone-out (channel) with a different frequency.

If you press **Channel** while in Standby/Search mode, the scanner temporarily exits and you will be able to hear any transmissions on that frequency. No alerts sound, even if a tone-out matches one you have programmed in hold mode. Press **Channel** again to return to Standby/Search mode.

If the scanner finds tones in Tone-Out Search mode, you will see the tones in the display. Press **E/yes** and you will see **Set Found Tone A and B?** Press **E/yes** to save.

Tone-Out Search Mode

Select a Different Tone-Out

Turn the **Scroll Control**.

Listen to Tone-Out Frequency

Press **Channel**.

Attenuation

Press **Func** then **4(ATT)**.

Press **FUNC** then press and hold **4(ATT)** to toggle global attenuation. (**ATT** blinks in the display when global attenuation is on.)

Modulation

Press **Func** then **Channel(MOD).**

Intermediate Frequency Exchange

Press **Func** then **7(IFX)** to toggle on or off.

Start/Stop Recording

Press **Func** then **Replay**.

Note: Resets to Off when you turn off the scanner.

Store Found Tones

Press **E/yes.** Press **E/yes** at **Set Found Tone A and B?.**

After storing the tones, you will be at the Tone-Out setup menu to complete the settings for the new channel. If you don't want to edit the channel settings or are done editing the channel, press **Avoid** to return to searching.

Tone-Out Menu

Press **Func** then **Menu**.

APPENDIX

TROUBLESHOOTING

Scan Mode, Nothing to Scan

1. Make sure you Set Your Location to scan the Database.
2. Make sure Favorites Lists are enabled in Set Scan Selection.
3. Make sure Service Types are enabled for the Channels you want to hear.
4. Make sure you have locations programed if Use Location Control is On.
5. Make sure longitude and latitude are N and W (for N America).
6. Make sure Systems/Departments/Channels are not Avoided.
7. Make sure Favorites List/System/Department/Site quick key is enabled.
8. (Search with Scan) Make sure Search with Scan is enabled in Select Lists to Monitor and the Search for Menu and for the Custom Search.

Scanning Interrupted

1. Turn off Priority Scan.
2. Change Priority Interval.
3. Turn off Close Call Priority.
4. Turn off Weather Priority.
5. Set Channel Delay longer.
6. Set positive Channel Delay.

All Channels Out of Range

1. Increase your range.
2. Change your location.
3. Turn Location Control off for the Favorites List.

CHARACTERS

Characters for a **File/Folder Name** are as follows:

“ABCDEFGHIJKLMNOPQRSTUVWXYZ abcdefghijklmnopqrstuvwxyz

1234567890 _()-“

System Name and Set Discovery Name of Discovery Menu.

Review Recordings of Replay Options Menu.

Characters for a **Name Tag** are as follows:

“ABCDEFGHIJKLMNOPQRSTUVWXYZ abcdefghijklmnopqrstuvwxyz 1234567890 [\]^_`{|}~!”#$%&’()*+,-./:;<=>?@ “

Edit Channel, Department, Site, System.

Edit Custom Menu.

Edit Location.

Edit Tone-Out.

Edit Review WX Alerts.

Edit Unit IDs.

Program SAME.

DEFAULT BAND COVERAGE

Frequency Range		Mode	Step (kHz)	Band
Lower	Upper			
25.0000	26.9600	AM	5	Petroleum Products & Broadcast Pickup
26.9650	27.4050	AM	5	CB Class D Channel
27.4100	27.9950	AM	5	Business & Forest Products
28.0000	29.6800	NFM	20	10 Meter Amateur Band
29.7000	49.9900	NFM	10	VHF Low Band
50.0000	53.9800	NFM	60	6 Meter Amateur Band
54.0000	71.9500	WFM	50	VHF TV Broadcast 2 – 4
72.0000	75.9950	FM	5	Intersystem & Astronomy
76.0000	87.9950	WFM	50	VHF TV Broadcast 5 – 6
88.0000	107.9000	FMB	100	FM Broadcast
108.0000	136.9916	AM	8.33	Commercial Aircraft
137.0000	143.9875	NFM	12.5	Military Land Mobile
144.0000	147.9950	NFM	5	2 Meter Amateur Band
148.0000	150.7875	NFM	12.5	Military Land Mobile
150.8000	161.9950	NFM	5	VHF High Band
162.0000	173.9875	NFM	12.5	Federal Government
174.0000	215.9500	WFM	50	TV Broadcast 7 – 13
216.0000	224.9800	NFM	20	1.25 Meter Amateur Band
225.0000	379.9750	AM	25	UHF Aircraft Band
380.0000	399.9875	NFM	12.5	Trunked Military Band
400.0000	405.9875	NFM	12.5	Miscellaneous
406.0000	419.9875	NFM	12.5	Trunked Federal Government
420.0000	449.9875	NFM	12.5	70 cm Amateur Band
450.0000	469.9875	NFM	12.5	UHF Standard Band
470.0000	512.0000	NFM	12.5	UHF TV Band
758.0000	787.99375	NFM	6.25	Public Service Band
788.0000	805.99375	NFM	6.25	Public Service Band
806.0000	823.9875	NFM	12.5	Public Service Band
849.0125	868.9875	NFM	12.5	Public Service Band
894.0125	960.0000	NFM	12.5	Public Service Band
1240.0000	1300.0000	NFM	25	25 cm Amateur Band

When you select **AUTO** for a channel, modulation, or step, the above values are used unless you've edited the Band Defaults

Steps can be selected from 5/6.25/7.5/8.33/10/12.5/15/20/25/50/100/AUTO (kHz).

Although TV bands are listed, the scanner cannot decode digital TV audio.

SERVICE TYPES

Service Type	Description
Aircraft	For civilian aircraft and air traffic control operations most typically in the 118-136 MHz and 225-380 MHz bands in AM mode.
Business	Most business related entities not covered by other tags.
Corrections	Jail/prison operations, corrections activities, federal prisons.
Emergency Ops	Emergency Operation Centers and similar emergency management or disaster related operations.
EMS Dispatch	Ambulance dispatch, including rescue squads.
EMS-Tac	Ambulance on-scene communications, tactical operations and secondary channels.
EMS-Talk	Ambulance talk-around, car-to-car and supervisor operations.
Federal	All federal government operations (except corrections, traditional law enforcement patrol and fire/EMS operations).
Fire Dispatch	Fire dispatch, including combined fire/ambulance dispatch.
Fire-Tac	Fireground, tactical and on-scene communications, including combined fire/ambulance operations.
Fire-Talk	Fire talk-around and car-to-car operations, chiefs, supervisors, etc., including combined fire/ambulance operations.
Ham	Any amateur radio assignment
Hospital	Ambulance-to-Hospital communications and patient reports.
Interop	Interoperability communications, cross-agency communications, mutual aid, etc.
Law Dispatch	Law enforcement dispatch.
Law-Tac	Law enforcement tactical, SWAT, on-scene, surveillance and specific sub-agency communications.
Law Talk	Law enforcement talk-around, car-to-car and supervisor operations.
Media	Newspapers, television and broadcast radio operations.
Military	Military operations, e.g., range control, air-to-air combat, etc.
Multi-Dispatch	Combined law enforcement and fire/ambulance dispatch.
Multi-Tac	Combined law enforcement and fire/ambulance tactical and on-scene communications.
Multi-Talk	Combined law enforcement and fire/ambulance tactical talk-around and car-to-car operations.
Public Works	Public agency non-public safety communications. This includes any non-public safety government services, such as trash, streets, roads, sewer, zoos, administration, maintenance, animal control, community initiatives, code compliance, etc.

Service Type	Description
Racing Officials	Available for use to identify officials' frequencies for racing events.
Racing Teams	Available for use to identify team frequencies for racing events.
Railroad	All common carrier railroad communications.
Schools	School-related communications (schools, school buses, football games, etc.).
Security	Non-law enforcement security operations, including private security companies, noncommissioned government agency security, school security, etc.
Transportation	Public and private bus, taxi, and public passenger rail communications.
Utilities	Private electric, water, natural gas, phone, cable TV, etc. operations.
Other	Miscellaneous channels that do not fall into another service type.
Custom 1-8	User-defined service types. These can be used for custom groups of channels, systems, sites, etc.

REMOVING THE microSD CARD

Turn your scanner off. Carefully remove the microSD card by using a thumbnail or pencil eraser to push the card in so it will spring out. Handle with care if you are going to use it in a card reader. Gently install the microSD card the same way it was removed and to push the card in so it will spring back into place.

Reformatting the microSD Card

Reformat microSD cards using a special SD Card Formatter (https://www.sdcard.org/downloads/formatter_4/). Then, you need to "Clear User Data" using Sentinel to restore all HP files and directories to the card.

After formatting, the HP won't be automatically detected (since it is wiped clean), so you may need to uncheck "Hide empty drives" in windows "Tools>Folder Options>View before doing the "Clear User Data" step.

ENTERING IDS

These are the acceptable ID entry formats.

Partial IDs can be used to receive all IDs in a Fleet, Sub-Fleet, Agency, etc.

Partial IDs can also be Avoided.

System Type		TGID Format
Motorola Type 1 Systems	B = Block F = Fleet S = Sub-Fleet N = Decimal Number i = I-Call ID	BFF-SS = Normal ID BFFF-S = Normal ID (Fleet is 100 - 127) BFF- = Partial Fleet ID BFFF- = Partial Fleet ID (Fleet is 100 - 127) B- = Partial Block IDS
		NNNNN (Size code 0) iNNNNN (Size code 0)

System Type		TGID Format
Motorola Type 2 Systems	N = Decimal Number H = Hexadecimal Number i = I-Call ID	*Decimal Format* NNNNN iNNNNN *Hexadecimal Format* HHHH iHHHH
P25 Systems	N = Decimal Number H = Hexadecimal Number i = I-Call ID	*Decimal Format* NNNNN iNNNNNNNN *Hexadecimal Format* HHHH iHHHHHH
EDACS Systems	A = Agency F = Fleet S = Sub-Fleet N = Decimal Number i = I-Call ID Only AFS Format is allowed for direct entry except for I-Call ID.	*AFS Format* AA-FFS (Normal ID) AA-FF- (Partial Fleet ID) AA- (Partial Agency ID) *Decimal Format* NNNN iNNNNN
LTR Systems	A = Area number RR = Home Repeater Number U = Decimal Number	A-RR-UUU (Normal ID) A-RR (Partial Repeater ID)

TYPE II SPECIAL STATUS BITS

Type II Motorola Smartnet systems use these status bits for special transmissions such as emergency, patches, DES/DVP scrambled transmissions, and multiselects. Motorola trunking radios directly interpret them for their special functions, thus no difference is noticed by the person with the radio. The scanner however interprets these special talk group status bits as different talk groups entirely. Below is the conversion chart for these special status bits.

TT ID + # Usage	TT ID + # Usage
ID+0 Normal Talk group	ID+8 DES/DVP Encryption talk group
ID+1 All Talk group	ID+9 DES All Talk group
ID+2 Emergency	ID+10 DES Emergency
ID+3 Talk group patch to another	ID+11 DES Talk group patch
ID+4 Emergency Patch	ID+12 DES Emergency Patch
ID+5 Emergency multi-group	ID+13 DES Emergency multi-group
ID+6 unassigned	ID+14 unassigned
ID+7 Multi-select (initiated by dispatcher)	ID+15 Multi-select DES TG

Therefore, if a user was transmitting a multi-select call on talk group 1808, the scanner would actually receive those transmissions on 1815.

Some common uses of these status bits are as follows:

> When a user hits their emergency button, all conversations on the talk group revert to the emergency status talk group (ID+2) until the dispatch clears the emergency status.

Therefore, if someone hit their emergency button and their radio was on talk group 16, all communications would switch to talk group 18.

A lot of Fire and EMS departments dispatch tone-outs and alarms as Multi-select communications (ID+7). Therefore, if your fire department dispatch talk group is 1616, and they do dispatch tone-outs and alarms as Multi-selects, then those communications will be on talk group 1623.

WEATHER CHANNELS

Channel	Frequency	Channel	Frequency
1	162.550	5	162.450
2	162.400	6	162.500
3	162.475	7	162.525
4	162.425		

ST	Event Code	Warning	Watch	Advisory	Definition?
ADR	Administrative Message			O	Admin Message
AVA	Avalanche Watch		O		Avalanche
AVW	Avalanche Warning	O			Avalanche
BHW	Biological Hazard Warning	O			Biological
BWW	Boil Water Warning	O			Boil Water
BZW	Blizzard Warning	O			Blizzard
CAE	Child Abduction Emergency			O	Child Emergency
CDW	Civil Danger Warning	O			Civil Danger
CEM	Civil Emergency Message	O			Civil EMG
CFA	Coastal Flood Watch		O		Coastal Flood
CFW	Coastal Flood Warning	O			Coastal Flood
CHW	Chemical Hazard Warning	O			Chemical
CWW	Contaminated Water Warning	O			Contam. Water
DBA	Dam Watch		O		Dam Break
DBW	Dam Break Warning	O			Dam Break
DEW	Contagious Disease Warning	O			Contagious
DMO	Practice/Demo			O	System Demo
DSW	Dust Storm Warning	O			Dust Storm
EAN	Emergency Action Notification	O			EMG Notify
EAT	Emergency Action Termination			O	EMG Terminate
EQW	Earthquake Warning	O			Earthquake
EVA	Evacuation Watch		O		Evacuate Note
EVI	Immediate Evacuation	O			Evacuate Note

ST	Event Code	Warning	Watch	Advisory	Definition?
FCW	Food Contamination Warning	O			Food
FFA	Flash Flood Watch		O		Flash Flood
FFS	Flash Flood Statement			O	Flash Flood
FFW	Flash Flood Warning	O			Flash Flood
FLA	Flood Watch		O		Flood
FLS	Flood Statement			O	Flood
FLW	Flood Warning	O			Flood
FRW	Fire Warning	O			Fire
FSW	Flash Freeze Warning	O			Flash Freeze
FZW	Freeze Warning	O			Freeze
HLS	Hurricane Statement			O	Hurricane
HMW	Hazardous Material Warning	O			Hazardous
HUA	Hurricane Watch		O		Hurricane
HUW	Hurricane Warning	O			Hurricane
HWA	High Wind Watch		O		High Wind
HWW	High Wind Warning	O			High Wind
IBW	Iceberg Warning	O			Iceberg
IFW	Industrial Fire Warning	O			Industrial Fire
LAE	Local Area Emergency			O	Local EMG
LEW	Law Enforcement Warning	O			Law Enforcement
LSW	Land Slide Warning	O			Land Slide
NAT	National Audible Test			O	National Audible
NIC	National Information Center			O	National Info
NMN	Network Notification Message			O	Network Message
NPT	National Periodic Test			O	Nation Period
NST	National Silent Test			O	Nation Silent
NUW	Nuclear Power Plant Warning	O			Nuclear Plant
POS	Power Outage Advisory			O	Power Outage
RHW	Radiological Hazard Warning	O			Radiological
RMT	Required Monthly Test			O	Monthly
RWT	Required Weekly Test			O	Weekly
SMW	Special Marine Warning	O			Special Marine
SPS	Special Weather Statement			O	Special WX
SPW	Shelter In-Place Warning	O			Sheleter
SVA	Severe Thunderstorm Watch		O		Thunderstorm

ST	Event Code	Warning	Watch	Advisory	Definition?
SVR	Severe Thunderstorm Warning	O			Thunderstorm
SVS	Severe Weather Statement			O	Severe WX
TOA	Tornado Watch		O		Tornado
TOE	911 Telephone Outage Emergency			O	911 Phone Outage
TOR	Tornado Warning	O			Tornado
TRA	Tropical Storm Watch		O		Tropical Storm
TRW	Tropical Storm Warning	O			Tropical Storm
TSA	Tsunami Watch		O		Tsunami
TSW	Tsunami Warning	O			Tsunami
TXB	Transmitter Backup On			O	TX Backup On
TXF	Transmitter Carrier Off			O	TX Carrier Off
TXO	Transmitter Carrier On			O	TX Carrier On
TXP	Transmitter Primary On			O	TX Primary On
VOW	Volcano Warning	O			Volcano
WFA	Wild Fire Watch		O		Wild Fire
WFW	Wild Fire Warning	O			Wild Fire
WSA	Winter Storm Watch		O		Winter Storm
WSW	Winter Storm Warning	O			Winter Storm
**A	Unrecognized Watch		O		Unrecognized
**E	Unrecognized Emergency			O	Unrecognized
**S	Unrecognized Statement			O	Unrecognized
**W	Unrecognized Warning	O			Unrecognized

Continuous Tone Coded Squelch System (CTCSS) and Digital Coded Squelch (DCS) are two methods used to prevent interference by other radio communications. Your scanner can receive transmissions that use these codes.

CTCSS and DCS systems all use some form of coded squelch. Coded squelch involves the transmission of a special code signal along with the audio of a radio transmission. A receiver with coded squelch only activates when the received signal has the correct code. This lets many users share a single frequency, and decreases interference caused by distant transmitters on the same channel. In all major metropolitan areas of the United States, every available radio channel is assigned to more than one user.

CTCSS FREQUENCIES

The scanner can detect the following 50 CTCSS frequencies.

67.0Hz	94.8Hz	131.8Hz	171.3Hz	203.5Hz
69.3Hz	97.4Hz	136.5Hz	173.8Hz	206.5Hz
71.9Hz	100.0Hz	141.3Hz	177.3Hz	210.7Hz

74.4Hz	103.5Hz	146.2Hz	179.9Hz	218.1Hz
77.0Hz	107.2Hz	151.4Hz	183.5Hz	225.7Hz
79.7Hz	110.9Hz	156.7Hz	186.2Hz	229.1Hz
82.5Hz	114.8Hz	159.8Hz	189.9Hz	233.6Hz
85.4Hz	118.8Hz	162.2Hz	192.8Hz	241.8Hz
88.5Hz	123.0Hz	165.5Hz	196.6Hz	250.3Hz
91.5Hz	127.3Hz	167.9Hz	199.5Hz	254.1Hz

DCS CODES

The scanner can detect the following hexadecimal DCS codes.

006	031	054	116	145	205	245	266	332	411	452	506	612	703
007	032	065	122	152	212	246	271	343	412	454	516	624	712
015	036	071	125	155	214	251	274	346	413	455	523	627	723
017	043	072	131	156	223	252	306	351	423	462	526	631	731
021	047	073	132	162	225	255	311	356	431	464	532	632	732
023	050	074	134	165	226	261	315	364	432	465	546	654	734
025	051	114	141	172	243	263	325	365	445	466	565	662	743
026	053	115	143	174	244	265	331	371	446	503	606	664	754

REVERSE LIST

Base Frequency (MHz)	Offset (MHz)	Base Frequency (MHz)	Offset (MHz)
29.5200 - 29.5800	+0.1	450.0000 - 454.9875	+5
29.6200 - 29.6800	-0.1	455.0000 - 459.9875	-5
52.0100 - 52.9900	+1	460.0000 - 464.9875	+5
53.0100 - 53.9900	-1	465.0000 - 469.9875	-5
143.7500	+4.375	470.0000 - 472.9875	+3
143.9000	+4.25	473.0000 - 475.9875	-3
144.5100 - 144.8900	+0.6	476.0000 - 478.9875	+3
145.1100 - 145.4900	-0.6	479.0000 - 481.9875	-3
146.0100 - 146.3850	+0.6	482.0000 - 484.9875	+3
146.4150 - 146.5050	+1	485.0000 - 487.9875	-3
146.5950	+1	488.0000 - 490.9875	+3
146.6100 - 146.9850	-0.6	491.0000 - 493.9875	-3
147.0000 - 147.3900	+0.6	494.0000 - 496.9875	+3
147.4150 - 147.5050	-1	497.0000 - 499.9875	-3
147.5950	-1	500.0000 - 502.9875	+3

Base Frequency (MHz)	Offset (MHz)	Base Frequency (MHz)	Offset (MHz)
147.6000 - 147.9900	-0.6	503.0000 - 505.9875	-3
148.1250	-4.375	506.0000 - 508.9875	+3
158.1500	-4.25	509.0000 - 511.9875	-3
222.1200 - 223.3800	+1.6	758.0000 - 775.9937	+30
223.7200 - 224.9800	-1.6	788.0000 - 805.9937	-30
420.0000 - 424.9875	+5	806.0000 - 823.9875	+45
425.0000 - 429.9875	-5	851.000 - 868.9875	-45
440.0000 - 444.9875	+5	896.0000 - 901.0000	+39
445.0000 - 449.9875	-5	935.0000 - 940.0000	-39

REPEATER FREQUENCY LIST

Base Frequency (MHz)	Offset (MHz)	Base Frequency (MHz)	Offset (MHz)
455.0151 - 459.9950	-5	497.0001 - 500.0000	-3
465.0101 - 469.9950	-5	503.0001 - 506.0000	-3
473.0001 - 476.0000	-3	509.0001 - 512.0000	-3
479.0001 - 482.0000	-3	758.0000 - 775.9937	+30
485.0001 - 488.0000	-3	806.0051 - 823.9875	+45
491.0001 - 494.0000	-3	894.0125 - 921.0000	+39

TECHNICAL SPECIFICATIONS - BCD436HP

Band Coverage : 31 Bands

Size: 2.8 in (W) x 1.5 in (D) x 6.3 in (H) (without antenna)
71.1 mm (W) x 36.9 mm (D) x 160.9 mm (H) (without antenna)

Weight: 12.3 oz. (with antenna and battery)

Operating Temperature: + 14° F (– 10° C) to + 140° F (+ 60° C)

Storage Temperature: – 22° F (– 30° C) to + 158° F (+ 70° C)

Power Requirements: 3 X AA Rechargeable Ni-MH Batteries (2300mAh) (included)
3 X AA Alkaline Batteries (not included)
DV 5.0V ±5%. Connect to PC with USB cable (included)

LCD Display: 192 X 160 Full Dot Matrix LCD with white-color backlight.

Internal Speaker: 24ohm, 0.8W Max.

Certified in accordance with FCC Rules and Regulations Part 15 Sub-part C as of date of manufacture.

Weather Channels: 7 Channels

Scan Rate: 85 channels/second

Search Rate: 80 steps/second (12.5kHz step)
250 steps/second (5kHz step)

Scan Delay: 2 seconds

Audio Output Power: Internal Speaker - 360mW nominal (24ohm)
Headphone (L-ch) 4mW nominal (32 ohm)

Antenna: 50 ohms (Impedance)

Sensitivity (12dB SINAD) Nominal		
VHF Low 1 Band		
(AM)	25.005 MHz	0.4 µV
(NFM)	40.840 MHz	0.3 µV
(NFM)	53.980 MHz	0.3 µV
VHF Low 2 Band		
(WFM)	54.050 MHz	0.7 µV
(FM)	72.515 MHz	0.3 µV
(FMB)	107.100 MHz	0.6 µV
Aircraft Band		
(AM)	118.800 MHz	0.4 µV
(AM)	127.175 MHz	0.4 µV
(AM)	135.500 MHz	0.4 µV

VHF High 1 Band		
(NFM)	138.150 MHz	0.4 µV
(NFM)	161.985 MHz	0.3 µV
(NFM)	173.225 MHz	0.3 µV
(WFM)	197.450 MHz	0.6 uV
(NFM)	216.020 MHz	0.3 uV
VHF High 2 Band		
(AM)	225.050 MHz	0.3 µV
(AM)	272.950 MHz	0.4 µV
(AM)	315.050 MHz	0.4 µV
UHF Band		
(AM)	325.050 MHz	0.4 µV
(NFM)	406.875 MHz	0.3 µV
(NFM)	511.9125 MHz	0.3 µV
Public Service Band		
(NFM)	758.0125 MHz	0.3 µV
(NFM)	806.000 MHz	0.3 µV
(NFM)	857.150 MHz	0.3 µV
(NFM)	954.9125 MHz	0.3 µV
1200MHz Band		
(NFM)	1299.925 MHz	0.4 µV
Close Call Sensitivity (No Modulation)		
(NFM)	40.8400 MHz	-58 dBm
(FM)	72.5150 MHz	-65 dBm
(AM)	127.1750 MHz	-69 dBm
(NFM)	161.9850 MHz	-71 dBm
(AM)	272.9500 MHz	-71 dBm
(NFM)	406.8750 MHz	-66 dBm
(NFM)	857.1500 MHz	-64 dBm
(NFM)	1299.9250 MHz	-58 dBm
Signal Noise Ratio (nominal)		
VHF Low 1 Band		
(AM)	25.0050 MHz	49 dB
(NFM)	40.8400 MHz	43 dB
VHF Low 2 Band		
(WFM)	54.0500 MHz	53 dB

(FM)	72.5150 MHz	47 dB
(FMB)	107.100 MHz	60 dB
Aircraft Band		
(AM)	127.1750 MHz	50 dB
VHF High 1 Band		
(NFM)	161.9850 MHz	41 dB
(NFM)	173.2250 MHz	42 dB
(WFM)	197.4500 MHz	52 dB
VHF High 2 Band		
(AM)	272.9500MHz	50 dB
UHF Band		
(AM)	325.0500 MHz	50 dB
(NFM)	406.8750 MHz	41 dB
Public Service Band		
(NFM)	758.0125 MHz	42 dB
(NFM)	857.1500 MHz	42 dB
1200 MHz Band		
(NFM)	1299.9250 MHz	41 dB

Features, specifications, and availability of optional accessories are all subject to change without notice.

TECHNICAL SPECIFICATIONS - BCD536HP

Size: 7.2 in W (184 mm) x 5.9 in D (151) x 2.2 in H (56 mm)

Weight: 54.3 oz. (without accessories)

Operating Temperature:	+ 14° F (– 10° C) to + 140° F (+ 60° C)
Storage Temperature:	– 22° F (– 30° C) to + 158° F (+ 70° C)
Power Requirements:	DC 11.0 V - 16.6 V (Ext. DC Power Jack or DC Power Jack)
Orange Wire Operation:	DC 3 V - 16.6 V (Less than 10mA)
LCD Display:	64 X 288 Full Dot Matrix LCD

Internal Speaker: 8 ohm, 5W Max.

Certified in accordance with FCC Rules and Regulations Part 15 Sub-part C as of date of manufacture.

Weather Channels:	7 Channels
Scan Rate:	85 channels/second (nominal)
Search Rate:	80 steps/second (nominal) 250 steps/second (5kHz step - nominal)

Scan Delay:	2 seconds
Audio Output Power:	5W Max., 8 ohm Load
Antenna:	50 ohms (Impedance)

Sensitivity (12dB SINAD) Nominal		
VHF Low Band		
(AM)	25.005 MHz	0.4 µV
(NFM)	40.840 MHz	0.2 µV
(NFM)	53.980 MHz	0.2 µV
VHF Low 2 Band		
(WFM)	54.050 MHz	0.6 µV
(FM)	72.515 MHz	0.2 µV
(FMB)	107.100 MHz	0.6 µV
Aircraft Band		
(AM)	118.800 MHz	0.3 µV
(AM)	127.175 MHz	0.3 µV
(AM)	135.500 MHz	0.3 µV
VHF High 1 Band		
(NFM)	138.150 MHz	0.2 µV
(NFM)	161.985 MHz	0.2 µV
(NFM)	173.225 MHz	0.3 uV
(WFM)	197.450 MHz	0.6 uV
(NFM)	216.020 MHz	0.3 uV
VHF High 2 Band		
(AM)	225.050 MHz	0.3 µV
(AM)	272.950 MHz	0.3 µV
(AM)	315.050 MHz	0.4 µV
UHF Band		
(AM)	325.050 MHz	0.4 µV
(NFM)	406.8750 MHz	0.3 µV
(NFM)	511.9125 MHz	0.3 µV
Public Service Band		
(NFM)	758.0125 MHz	0.3 µV
(NFM)	806.000 MHz	0.3 µV
(NFM)	857.150 MHz	0.2 µV
(NFM)	954.9125 MHz	0.2 µV
1200MHz Band		
(NFM)	1299.9250MHz	0.3 µV

Close Call Sensitivity (No Modulation)		
(NFM)	40.8400 MHz	-60dBm
(FM)	72.5150 MHz	-62dBm
(AM)	127.1750 MHz	-67dBm
(NFM)	161.9850 MHz	-66dBm
(AM)	272.9500 MHz	-67dBm
(NFM)	406.8750 MHz	-63dBm
(NFM)	857.1500 MHz	-63dBm
(NFM)	1299.9250 MHz	-56dBm
Signal Noise Ratio (nominal)		
VHF Low 1 Band		
(AM)	25.0050 MHz	48dB
(NFM)	40.8400 MHz	42dB
VHF Low 2 Band		
(WFM)	54.0500 MHz	52dB
(FM)	72.5150 MHz	47dB
(FMB)	107.1000 MHz	58dB
Aircraft Band		
(AM)	127.1750 MHz	49dB
VHF High 1 Band		
(NFM)	161.9850 MHz	40dB
(NFM)	173.2250 MHz	41dB
(WFM)	197.4500 MHz	53dB
VHF High 2 Band		
(AM)	272.9500 MHz	49dB
UHF Band		
(AM)	325.0500 MHz	49dB
(NFM)	406.8750 MHz	40dB
Public Service Band		
(NFM)	758.0125 MHz	41dB
(NFM)	857.1500 MHz	41dB
1200 MHz Band		
(NFM)	1299.9250 MHz	42dB

Features, specifications, and availability of optional accessories are all subject to change without notice.

WARRANTY INFORMATION

WARRANTOR: UNIDEN AMERICA CORPORATION (Uniden)

ELEMENTS OF WARRANTY: Uniden warrants, for one year, to the original retail owner, this Uniden Product to be free from defects in materials and craftsmanship with only the limitations or exclusions set out below.

WARRANTY DURATION: This warranty to the original user shall terminate and be of no further effect 12 months after the date of original retail sale.

The warranty is invalid if the Product is

(A) damaged or not maintained as reasonable or necessary,

(B) modified, altered, or used as part of any conversion kits, subassemblies, or any configurations not sold by Uniden,

(C) improperly installed,

(D) serviced or repaired by someone other than an authorized Uniden service center for a defect or malfunction covered by this warranty,

(E) used in any conjunction with equipment or parts or as part of any system not manufactured by Uniden, or

(F) installed or programmed by anyone other than as detailed by the Operating Guide for this product.

STATEMENT OF REMEDY: In the event that the product does not conform to this warranty at any time while this warranty is in effect, warrantor will repair the defect and return it to you without charge for parts, service, or any other cost (except shipping and handling) incurred by warrantor or its representatives in connection with the performance of this warranty. THE LIMITED WARRANTY SET FORTH ABOVE IS THE SOLE AND ENTIRE WARRANTY PERTAINING TO THE PRODUCT AND IS IN LIEU OF AND EXCLUDES ALL OTHER WARRANTIES OF ANY NATURE WHATSOEVER, WHETHER EXPRESS, IMPLIED OR ARISING BY OPERATION OF LAW, INCLUDING, BUT NOT LIMITED TO ANY IMPLIED WARRANTIES OF MERCHANTABILITY OR FITNESS FOR A PARTICULAR PURPOSE. THIS WARRANTY DOES NOT COVER OR PROVIDE FOR THE REIMBURSEMENT OR PAYMENT OF INCIDENTAL OR CONSEQUENTIAL DAMAGES. Some states do not allow this exclusion or limitation of incidental or consequential damages so the above limitation or exclusion might not apply to you.

LEGAL REMEDIES: This warranty gives you specific legal rights, and you might also have other rights which vary from state to state.

This warranty is void outside the United States of America.

PROCEDURE FOR OBTAINING PERFORMANCE OF WARRANTY: If, after following the instructions in this Operating Guide you are certain that the Product is defective, pack the Product carefully (preferably in its original packaging). Include evidence of original purchase and a note describing the defect that has caused you to return it. The Product should be shipped freight prepaid, by traceable means, or delivered, to warrantor at:

Uniden America Corporation
301 International Parkway, Suite 460
Flower Mound, TX 75022