No. 638,249. Patented Dec. 5, 1899.

A. E. KEITH & J. & C. J. ERICKSON.

ELECTRICAL EXCHANGE.

(Application filed Dec. 16, 1895.)

(No Model.) 5 Sheets—Sheet 1.

Fig. 1.

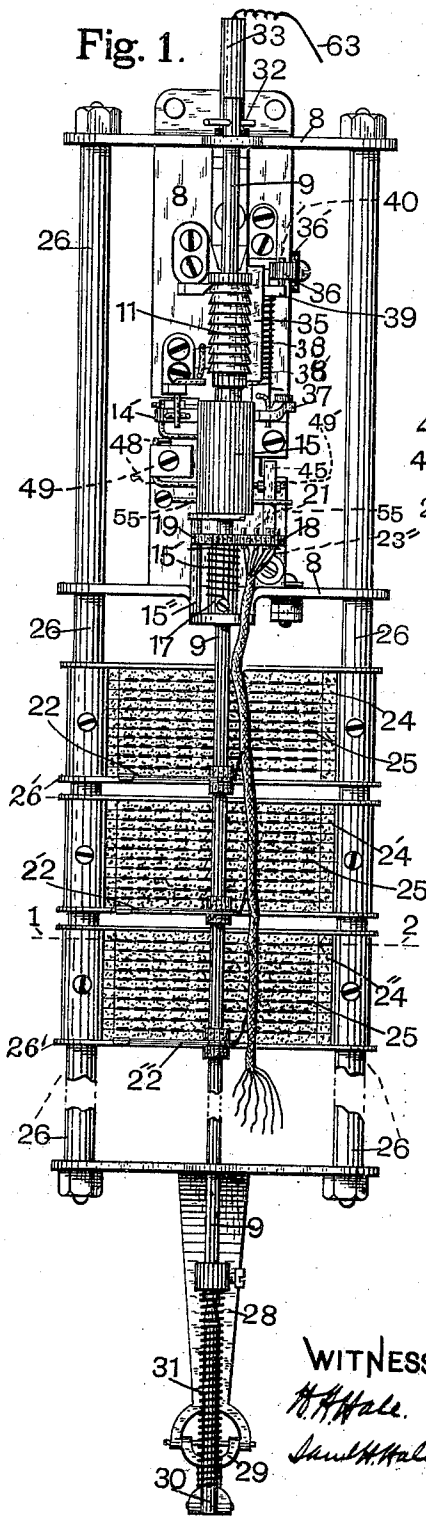

Fig. 2.

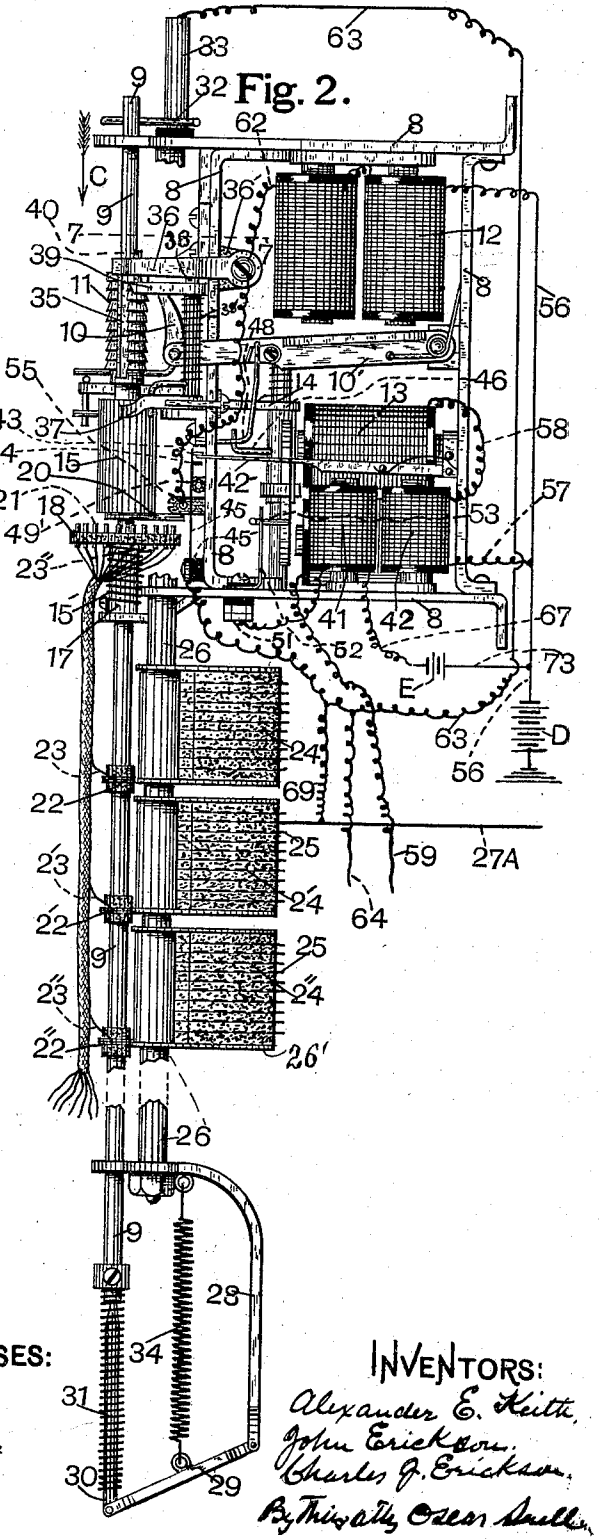

WITNESSES:

H. H. Hale.

Saml H. Hale

INVENTORS:

Alexander E. Keith,

John Erickson.

Charles J. Erickson.

By Thos. Atty Oscar Snell.

THE NORRIS PETERS CO., PHOTO-LITHO., WASHINGTON, D. C.

No. 638,249. Patented Dec. 5, 1899.

A. E. KEITH & J. & C. J. ERICKSON.

ELECTRICAL EXCHANGE.

(No Model.) (Application filed Dec. 16, 1895.) 5 Sheets—Sheet 2.

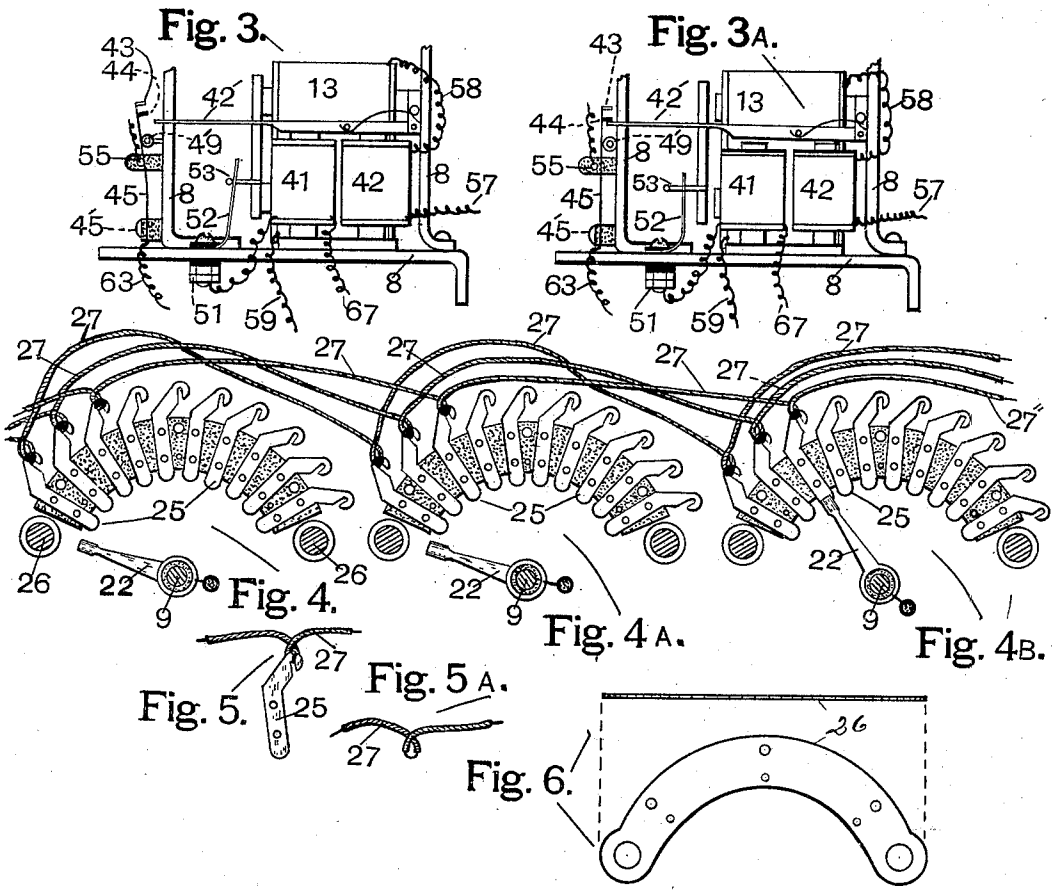

WITNESSES:

H. H. Hale

Saml. H. Hale

INVENTORS:

Alexander E. Keith.

John Erickson.

Charles J. Erickson.

By their Atty. Oscar Snell.

THE NORRIS PETERS CO., PHOTO-LITHO., WASHINGTON, D. C.

No. 638,249. Patented Dec. 5, 1899.

A. E. KEITH & J. & C. J. ERICKSON.

ELECTRICAL EXCHANGE.

(Application filed Dec. 16, 1895.)

(No Model.) 5 Sheets—Sheet 3.

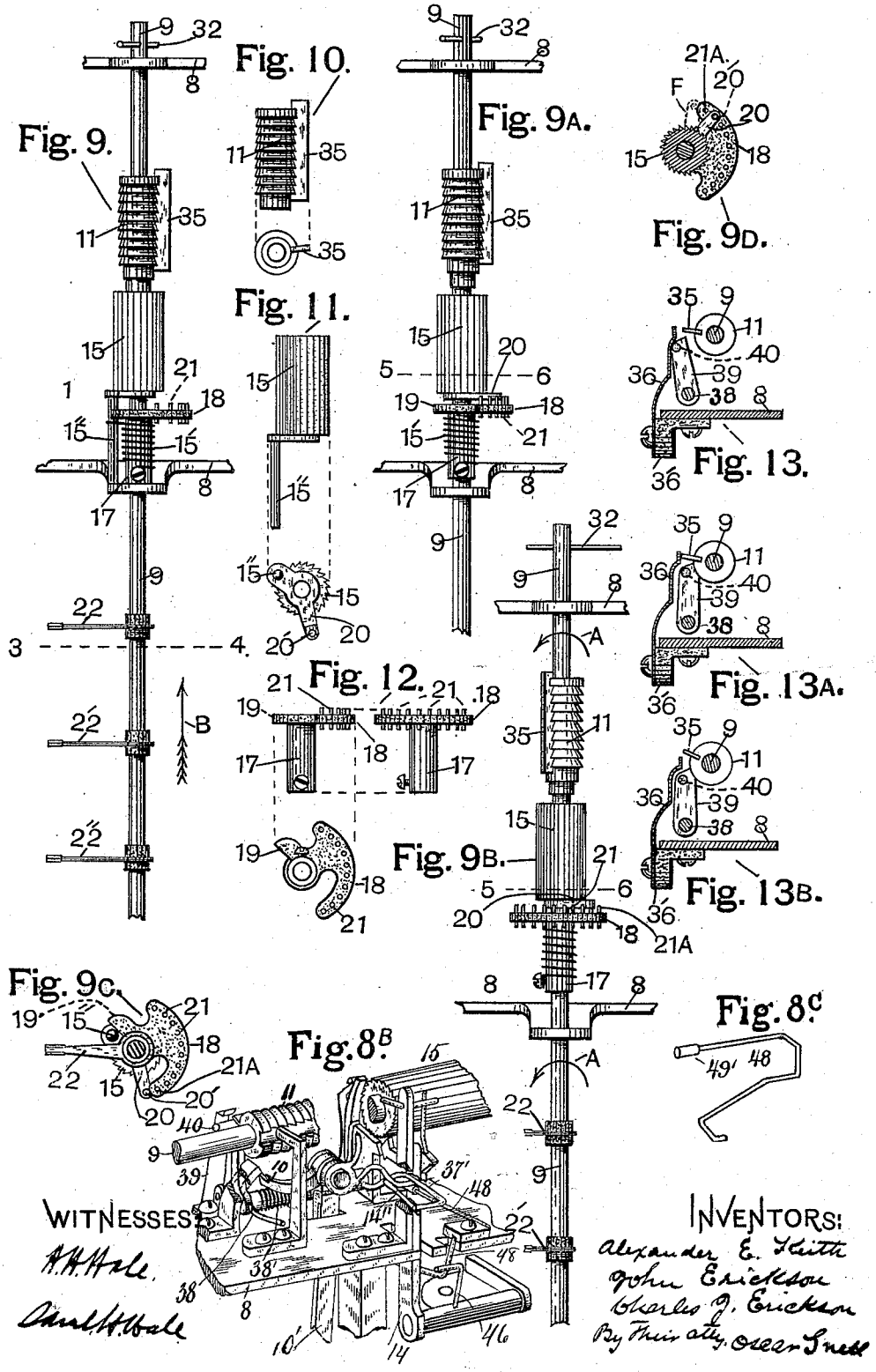

WITNESSES:
A. H. Hale
Chas. H. Hale

INVENTORS:
Alexander E. Keith
John Erickson
Charles J. Erickson
By their atty. Oscar Snell

THE NORRIS PETERS CO., PHOTO-LITHO., WASHINGTON, D. C.

No. 638,249. Patented Dec. 5, 1899.

A. E. KEITH & J. & C. J. ERICKSON.

ELECTRICAL EXCHANGE.

(Application filed Dec. 16, 1895.)

(No Model.) 5 Sheets—Sheet 4.

Fig. 14.

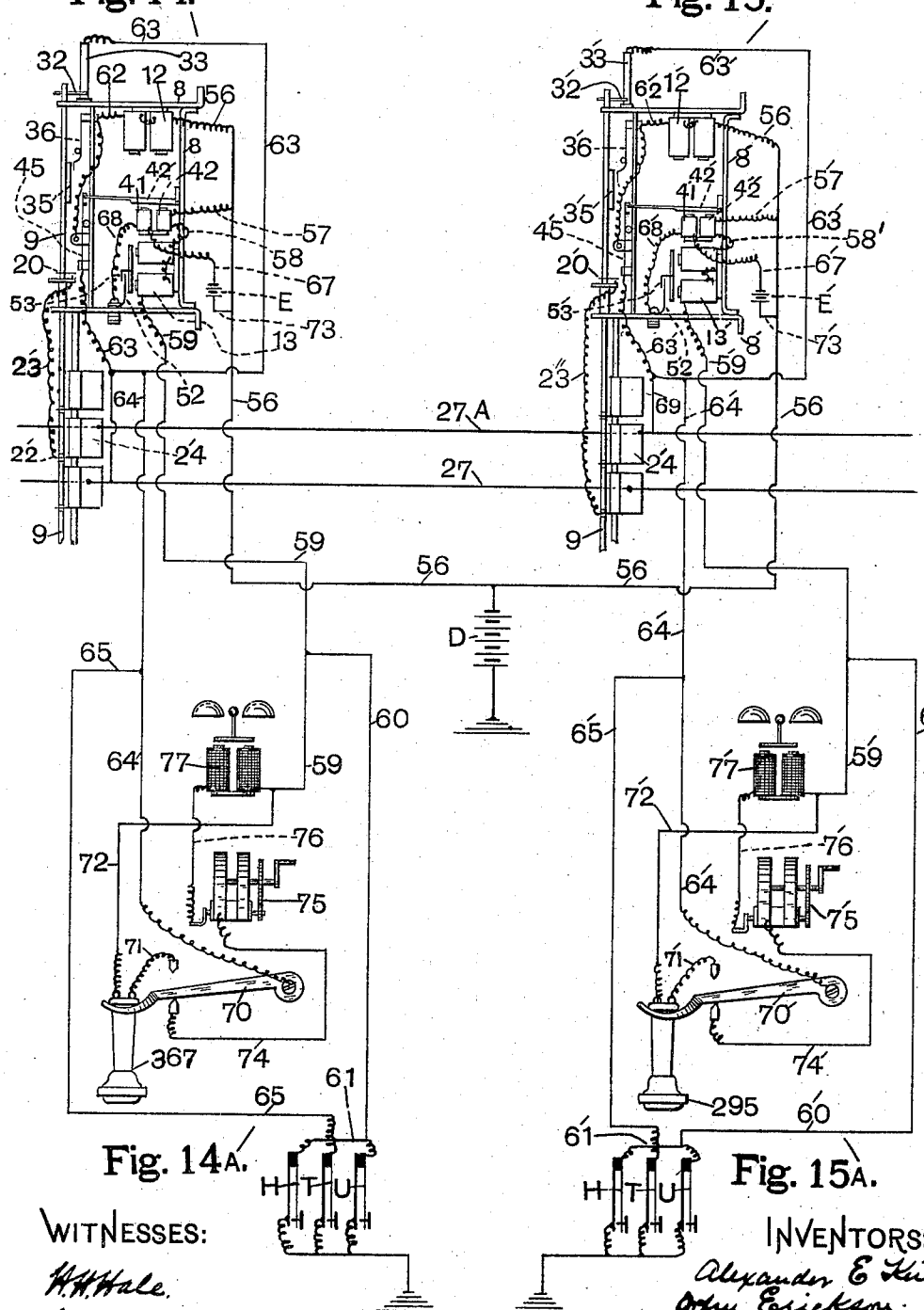

Fig. 15.

Fig. 14A.

Fig. 15A.

WITNESSES:

H. H. Hale.

Saml. H. Hale.

INVENTORS:

Alexander E. Keith.

John Erickson.

Charles J. Erickson.

By their atty. Oscar Snell.

THE NORRIS PETERS CO., PHOTO-LITHO., WASHINGTON, D. C.

No. 638,249. Patented Dec. 5, 1899.

A. E. KEITH & J. & C. J. ERICKSON.

ELECTRICAL EXCHANGE.

(No Model.) (Application filed Dec. 16, 1895.) 5 Sheets—Sheet 5.

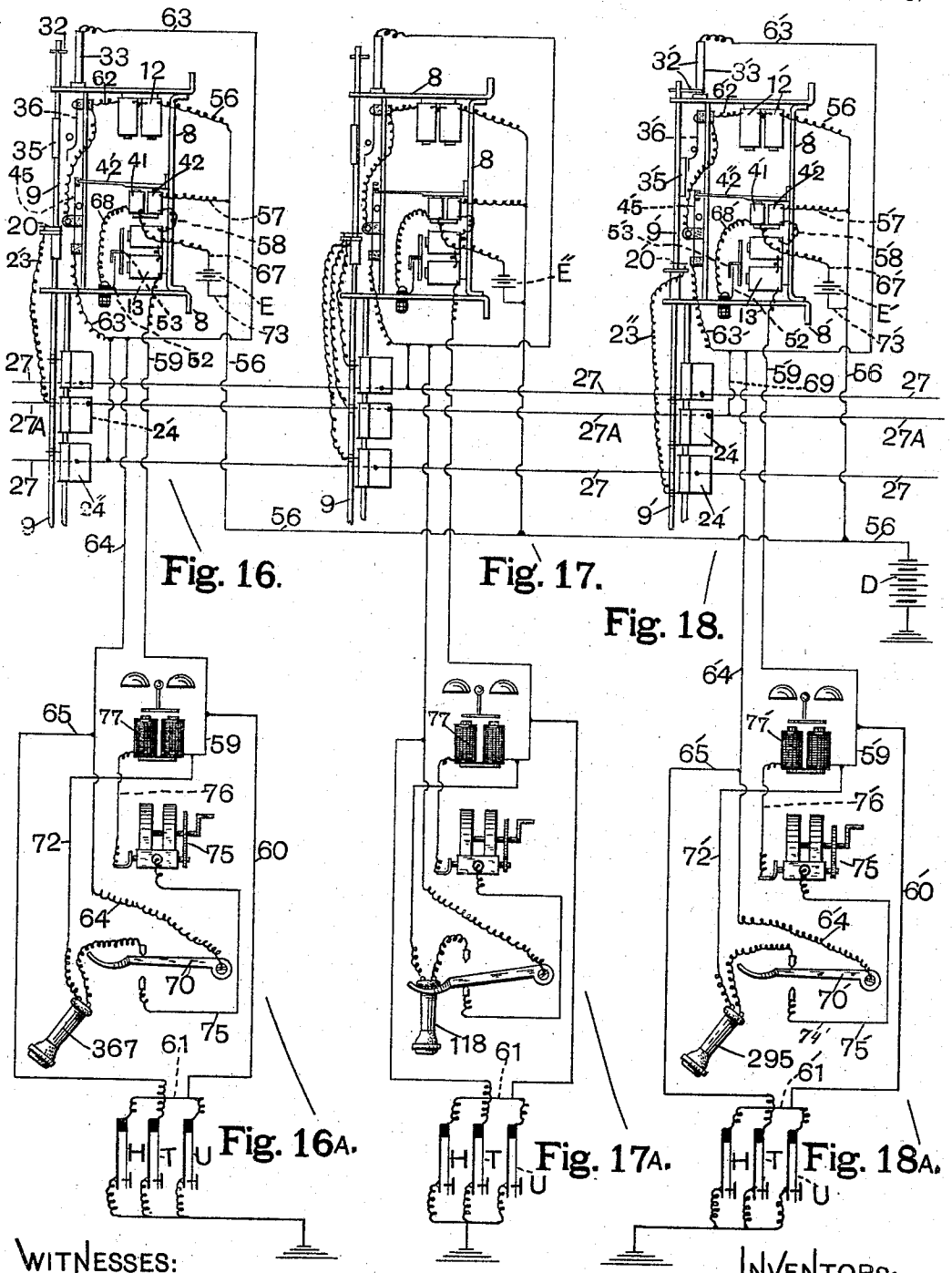

WITNESSES:

H. A. Hale.

Emil H. Hale.

INVENTORS:

Alexander E. Keith.

John Erickson.

Charles J. Erickson.

By their atty, Oscar Sullivan.

THE NORRIS PETERS CO., PHOTO-LITHO., WASHINGTON, D. C.

UNITED STATES PATENT OFFICE.

ALEXANDER E. KEITH, JOHN ERICKSON, AND CHARLES J. ERICKSON, OF CHICAGO, ILLINOIS, ASSIGNORS TO THE STROWGER AUTOMATIC TELEPHONE EXCHANGE, OF SAME PLACE.

ELECTRICAL EXCHANGE.

SPECIFICATION forming part of Letters Patent No. 638,249, dated December 5, 1899.

Application filed December 16, 1895. Serial No. 572,331. (No model.)

To all whom it may concern:

Be it known that we, ALEXANDER E. KEITH, JOHN ERICKSON, and CHARLES J. ERICKSON, citizens of the United States, residing at Chicago, in the county of Cook and State of Illinois, have invented a new and useful Electrical Exchange, of which the following is a specification.

Our invention relates to electrical exchanges; and our object is to introduce several novel features and modifications in the construction of the system of electrical exchanges embodied in Letters Patent of the United States No. 540,168, dated May 28, 1895, to Alexander E. Keith, Frank A. Lundquist, John Erickson, and Charles J. Erickson, and also application for patent of the United States for electrical exchange, Serial No. 556,229, filed July 17, 1895, invented by Almon B. Strowger, Frank A. Lundquist, John Erickson, and Charles J. Erickson, our new improvements being described hereinafter and illustrated in the accompanying drawings, in which—

Figure 1 is a front view, and Fig. 2 a side elevation, of an electrical exchange in the suspended normal position, in which is embodied the greater part of our improvements. Figs. 3 and 3^A are detached portions of the elevation shown in Fig. 2, with several of the parts in a changed position to illustrate the manner of operating an automatic cut-out for a secret system. Figs. 4, 4^A, and 4^B show horizontal sections of a portion of several exchanges on broken line 1 2, Fig. 1, looking downwardly, and illustrate the curved position of the contact-points and the manner of connecting the interconnecting wires of several exchanges, together with the relative position of the main switch arms or wipers at the normal position and when in touch with the contact-points. Figs. 5 and 5^A illustrate the half-twist of the interconnecting wires at the point of connection with the contact-pieces and also show that the interconnecting wires are stripped of the insulation where they attach to the contact-strip hooks. Fig. 6 shows, respectively, a front elevation and a plan of one of the curved metal strips which serve as end pieces for the attachment of rivets or bolts which pass through a group of contact-points comprising a number of curved insulating-pieces, shown in elevation and plan view in Fig. 7. Fig. 8 is a plan view of one of the curved insulating-pieces shown in Fig. 7 as it appears when attached to the exchange, with the contact-points in position, and one of the wipers for contacting the same attached to its shaft and in the normal position. Figs. 8^A and 8^B are broken detail views of the releasing mechanism, taken in two positions, and 8^C is a detail view of the bent wire 48. Fig. 9 is a plan view of the main shaft with ratchets through which the same is operated mounted thereon, an auxiliary switch being also shown in position, together with three wipers, these several points being shown in the initial position. Fig. 9^A is an elevation the same as upper portion of Fig. 9, but with an auxiliary switch-arm in the position it occupies after six step-by-step rotary movements and after the main shaft has had the first longitudinal step-by-step movement. Fig. 9^B is a similar elevation as shown in Fig. 9, with the exception that the main shaft has had five longitudinal step-by-step movements upwardly and two step-by-step rotary movements in the direction indicated by arrow A, the auxiliary switch having had two rotary step-by-step movements on the shaft and in the same direction, as indicated also by arrow A. Fig. 9^C is a cross-section of the main shaft on line 3 4, Fig. 9, showing the auxiliary switch and one of the wiper-arms of the main switch in bottom elevation or when looking in the direction indicated by arrow B. Fig. 9^D is a horizontal section on line 5 6, Fig. 9^A or Fig. 9^B, of the rotary ratchet-wheel, with a plan of the auxiliary-switch contact-point holder and contact-arm in touch with the second contact-point. Fig. 10 is an elevation and a plan of the cylindrical ratchet through which a longitudinal movement is imparted to the main shaft, there being a projecting strip at one side of this ratchet for a purpose which is explained hereinafter. Fig. 11 shows, respectively, an elevation and a plan of the ratchet through which a rotary movement is imparted not only to the main shaft but to the arm of the auxiliary switch. Fig. 12 shows, respec-

tively, a front and side elevation and a plan of the holder, of insulating material, into which are secured the several contact points or pins of the auxiliary switch, which holder is firmly secured to the main shaft and partakes of all its movements. Figs. 13, 13^A, and 13^B are vertical sections of the top plate of the frame of the exchange and of the main shaft on broken line 7 7, Fig. 2, looking in the direction indicated by arrow C, to illustrate the action of a spring cut-out which is fully described hereinafter. Figs. 14, 14^A, 15, and 15^A are diagrammatic views of two complete telephone systems, with the exchanges therefor, the same capable of being connected, the parts being shown in the normal position, and, in order to avoid complication, the telephone, we will suppose, is of the magneto variety and may therefore be used for both transmitter and receiver. Figs. 16, 16^A, 17, 17^A, 18, and 18^A, respectively, represent three interconnected telephone systems and the exchanges therefor, the telephone set in Fig. 16^A and the one in Fig. 18^A being in speaking connnection through the exchange in Fig. 16.

The telephone set in Fig. 17^A and the exchange therefor in Fig. 17 are shown connected to the exchanges in Figs. 16 and 18 to illustrate the action of an automatic secret service cut-out which each exchange is provided with and which effectually prevents two persons whose telephones are connected being disturbed in conversation by a person at any other telephone of a given system.

Similar numerals indicate like parts throughout the several views.

In the drawings, 8 indicates the several parts comprising the frame of the exchange, to the upper part of which is pivotally mounted the shaft 9, which is disposed vertically and is operated longitudinally upward step by step against gravity by means of a pawl 10, engaging in the teeth of cylindrical ratchet 11, the pawl 10 being attached to the free end of an arm 10′, which is operated by virtue of electromagnet 12. Shaft 9 is rotated step by step by virtue of magnet 13 through lever 14 and pawl 14′ engaging with ratchet-wheel 15, all of which mechanism, including the detents, is almost an exact duplicate of what is shown in application for patent Serial No. 556,229 and hereinbefore referred to, and therefore no particular description thereof is necessary. In the further description of our invention and in the claims we shall refer to the shaft 9 and its connected parts as a "connector," and the two magnets 12 and 13 will be designated as "motor-magnets." The ratchet-wheel 15, however, in this instance is loosely mounted upon shaft 9 and is held in the initial position shown by helical spring 15′, which has one end attached to a downwardly-projecting arm 15″ and the other end to the boss 17 of the auxiliary-switch contact-point holder 18, which boss is firmly secured to shaft 9. This spring holds the arm 15″ normally in contact with a stop 19, projecting from the contact-point holder 18. There is a combined switch arm and coupler, in the form of the arm 20, which is firmly secured to and projects laterally from the lower end of the ratchet-wheel 15. Near the outer end of the arm 20 is a hole 20′, Figs. 9^C, 9^D, and 11, which is at a distance from the center of shaft 9 so that as the ratchet 15 is revolved step by step against the tension of spring 15′ the arm 20 is carried around and at the termination of each step the hole 20′ registers with one of the contact-points 21, which are secured in the insulating-holder 18. There are ten contact-points 21 shown in Figs. 2, 9^B, and 12; but a greater or less number may be used, as may be necessary.

Shaft 9 is provided with a series of wipers insulatingly secured thereto, and in this instance all project from the same side of shaft 9. Only three wipers, 22, 22′, and 22″, are shown, but more may be used in large central stations, as may be required. Each wiper is connected independently by a wire to some one of the contact-points 21, and each of the several wires has an insulating-covering, and for convenience the wires are formed into a cable, as shown in Figs. 1 and 2.

The several exchanges of any given system are each provided with one or more groups, such as 24 24′ 24″, of contact-points 25, Figs. 1, 2, and 8. Each contact-point is insulated from the other, and they are ranged in straight vertical rows, but in concave horizontal rows, as shown. Each group of contact-points is usually numbered 100 and secured between plates of insulating material 25′, Fig. 7, and each group is secured upon vertical side rods 26 by means of the plates 26′, Fig. 6, as shown, there being one wiper for each group. The first contact-point of each group of the top or first series of groups is connected by an interconnecting wire 27 with the first contact-point of all the groups of that series, and the second contact-point is connected by a wire 27 with the second contact-point of all the groups of that series, and wire 27 connects the third contact-point, and so on, with all the contact-points of each of the other series of groups, as shown in Figs. 4, 4^A, and 4^B.

At the lower end of the side rod 26 is secured an arm 28, to which is pivoted an arm 29, whose other end is pivoted to the lower end of a short piece of round rod 30, which projects upwardly within helical spring 31. The upper end of rod 30 is pointed and has a bearing in the center of lower end of the main shaft 9, which may turn thereon, but is held in contact therewith by the tension of spring 31, which has the lower end secured to rod 30 and the upper end to the boss shown on the lower end of shaft 9, this spring also serving to turn shaft 9 backwardly to the normal position after it has been revolved forwardly by the action of the pawls hereinbefore described, the pin 32 at the top end of

shaft 9 serving as a stop by contacting the insulated pin 33, which is attached to the exchange-frame 8.

Spring 34, at the lower end of the exchange, serves to carry part of the weight of shaft 9, and thus relieve the strain of pawl 10 in lifting the shaft step by step vertically.

Secured to ratchet 11 is a strip of metal 35, and insulatingly attached to the side of the top of frame 8 at 36′ is a spring 36, whose top end is adapted to contact strip 35 at any point of the upward longitudinal step-by-step movement of ratchet 11. There is a detent 37, which serves to hold ratchet 15 in any desired operative position, and detent 37 is secured to one end of a pivotal shaft 38, and at the other end is secured a detent 39, which engages with the ratchet-cylinder 11, so that in the act of release both detents are simultaneously lifted from the ratchets.

At the top of the detent 39 is a laterally-projecting pin 40, of insulating material, which has a position, as shown in Figs. 13, 13^A, 13^B, so that when the detents 37 and 39 are out of contact with the ratchets by the rotation of the shaft 38 the pin 40 forces spring 36 out of contact with strip 35 on ratchet 11, and no current can pass from the spring into ratchet 11, shaft 9, and the frame 8 of the exchange. If, however, ratchet-wheel 15 is actuated one step forwardly, the spring 36 is dropped into contact with strip 35 by the falling of detent 39 into engagement with ratchet 11, as shown in Fig. 13^A. The shaft 38 is rotated so as to throw the detents out of engagement with the ratchets by means of an arm 37′, which extends across the frame above a wire tailpiece 10″, projecting from the pawl 10. The tailpiece is bent so as to form an incline which engages with the inner end of the pin 14″, which projects through the lever 14 and which is carried into the path of the tailpiece when the lever is drawn forward by the action of the magnet 13. If while the lever 14 is drawn forward the magnet 12 should be energized, so as to draw the arm 10′ forward, and with it the pawl 10, the tailpiece 10″ would be forced into engagement with the pin 14″, and the inclined portion would raise the end which is under the arm 37′, and thereby rotate the shaft 38, thus throwing the detents out of engagement with the ratchets upon the shaft 9. Now if the magnets 9 should be energized without deënergizing the magnet 12 the lever 14 will be forced back into its normal position and the outer end of the pin 14″ will pass under the outer end of the arm 37′, which is bent at an angle and is raised above the pin when the tailpiece is operated. While these parts are in this position, if the magnet 12 should be deënergized the arm 10′ and the pawl 10 will resume their normal position; but the bent portion of the arm 37′ will engage with the pin 14″ and be retained in that position, thereby holding the pawls 37 and 39 out of engagement with their respective ratchets.

The cut-out or means by which the conversation between two persons is made secret is shown in Figs. 1 and 2 and is constructed as follows:

At 41 and 42 are single-spool electromagnets whose coils are not directly connected; but the two spools are secured to the same cross-piece, and at 42′ is an arm which is not only an armature for magnets 41 and 42, but the free end thereof projects forward to a distance sufficient to contact the two projections 43 and 44 near the end of a spring 45, whose opposite end is insulatingly attached to frame 8 at 45′. Projection 44 on spring 45 is a piece of insulating material; but projection 43 is integral with the spring, so that current may pass from arm 42′ into spring 45 when in the normal position, with arm 42′ in contact with projection 43, Fig. 2; but no current can pass between these two parts when the arm 42′ is drawn in by virtue of electromagnets 41 and 42 to the position shown in Fig. 3^A, where the end of arm 42′ is in contact with the piece of insulation 44.

In Fig. 2 is shown a bent arm 46, projecting from the base which forms the pivotal end of arm 14. The vertically-disposed free end of arm 46 is in contact with bent wire 48, which is in the form of a bell-crank, as seen in Fig. 8^C, and is pivoted to a block 49, Fig. 1, then extending across the front plate of frame 8, and at the free end is covered with a piece of insulating material 49′.

Spring 45 extends from insulator 45′ and passes over and rests upon the insulated portion 49′ of bent wire 48. At 51 is an insulated screw secured to frame 8, and to this screw is attached a spring 52, and at 53 is an arm projecting from the armature of magnet 13, the other end of which arm is normally near, but not in contact with, spring 52; but should magnet 13 become energized arm 53 will contact spring 52 and bend it down, as is shown in Fig. 3, and at the same time the bent arm 46 causes the insulated end 49′ of bell-crank lever 48 to move spring 45 into contact with a cross-spring 55, which has one end attached to the frame of the exchange by a piece of insulated material, Fig. 3, so that if magnet 41 is energized the arm 42′ is free to take the position shown in Fig. 3, when if magnet 41 continues to be energized until after the current is cut out from magnets 13 and 42 the spring 45 will drop, with the free end of arm 42′ in contact with the piece of insulation 44, in which position no current can pass between spring 45 and arm 42′, which arm is pivoted to and is in electrical connection with the frame and shaft 9. Therefore any one making an attempt to cut into either of the lines of two already-connected telephones will automatically cut himself out every time his main switch-arm contacts either of the two contact-points of the two connected exchanges, the course of the current to accomplish this being described hereinafter.

The manner of attaching the interconnecting wires 27 to the contact-point strips is

plainly shown in Figs. 4, 4^A, 4^B, 5, and 5^A, the contact-point strips 25 being provided with hooks at their rear ends, which engage with loops successively formed at intervals along each of the interconnecting wires, the insulating-covering of these wires being cut at the point of contact, so that the bare wire may be soldered to the hooks to insure a perfect connection, the insulating material being slid back on the wire from the hook until after the soldering operation, when the insulation is again slid forward close up to the hooks, as shown.

In the construction of the shaft 9 and the several parts attached thereto we do not claim any particular method of insulating the wipers 22, &c.

The boss 17 is firmly secured to shaft 9 and serves as a stop by contacting frame 8, and thus limiting the downward movement of the shaft.

As has been described, the ratchet-wheel 15 is loosely mounted on shaft 9 to revolve and to slide a short distance longitudinally thereon; but when in the normal position it is held with the auxiliary switch-arm 20 above the plane of the ends of the contact-points 21, and the lower end of the downwardly-projecting arm 15″ and the lower end of boss 17 both rest upon the frame 8, as is shown in Figs. 1, 2, and 9. If, however, the ratchet-wheel 15 is turned one step forward, it will turn upon shaft 9 against the tension of spring 15′ from the normal position shown in the broken lines at F, Fig. 9^D, and in the solid lines, Fig. 9^C, to a position when the hole 20′ is directly over the first contact-point 21^A, and should the ratchet-wheel be turned two steps the switch-arm 20 will have a position with the hole 20′ directly over the second contact-point, as shown, when if from a thrust from pawl 10 against ratchet 11 shaft 9 is lifted another step the second contact-point will be forced into the hole at the end of the switch-arm 20, and thus not only serves to establish a circuit for an electric current from shaft 9 to the second contact-pin and thence by wire 23, Fig. 2, to wiper 22′ and thence to some one of the second group of contact-points in group 24′, Figs. 1 and 2, when the wiper is in contact therewith, but also serves as a coupler to cause shaft 9 to revolve step by step in unison with the revolution of ratchet-wheel 15 through the thrusts of pawl 14′. It must be understood, therefore, that the auxiliary switch-arm 20 must be set in this instance first to connect with some one of the groups of contact-points 24 24′, &c., before the shaft 9, together with the wipers 22 22′, &c., are permitted to revolve or the shaft to move longitudinally more than a single step. Each successive thrust of pawl 10 lifts shaft 9 one step and carries each of the wipers 22, 22′, and 22″ upward successively even with the ten horizontal rows of contact-points 25, and it is obvious that the several wipers may be lifted to register with any particular row of contact-points and then by the successive thrusts of pawl 14′ on the top of arm 14 be rotated to carry the free ends of the wipers into touch with any particular point 25 of the row.

The auxiliary switch embodied in the parts 18 20 and contact-points 21, with the wires connecting the points with the several wipers 22 22′ 22″, &c., serves as a selector for connecting with some particular group of one hundred—such as 24, 24′, or 24″, Figs. 1 and 2.

In operation to follow the course of the successive electric currents in making connection between two telephone-substations through the exchange-machines at the central station we will suppose that one telephone set at a substation is represented by Fig. 14^A and the exchange-machine directly connected thereto by two line-wires is Fig. 14 and that the number of this telephone is "367." We will also suppose that the distant substation to be called is No. 295 and is represented by the telephone set in Fig. 15^A and its exchange-machine is Fig. 15, and that not only these two telephone sets, but also the exchanges thereof, are at the normal position, as shown, and that the successive currents of electricity are controlled at the central station in each exchange-machine by means of three ordinary signal-keys at each substation, these keys being operated on the decimal system, and therefore are denominated "units," "tens," and "hundreds" keys and are here designated by the letters H, T, and U. To call No. 295, the H or hundreds key is pressed twice in succession, causing two distinct electrical impulses to pass from the main battery D at the central station over battery-wire 56 to wire 57, Fig. 14, to the single-spool magnet 42, then by wire 58 to magnet 13, then by wire 59 to wire 61, to key H, and to ground. (It will be noted that the first time the hundreds-key is pressed the magnet 13 is energized and the arm 14 is drawn forward, so as to carry the pin 14″ from under the end of the arm 37′, which permits the spring 38′ to rock the shaft 38, and the detents 37 and 39 are both permitted to drop upon their respective ratchets 15 and 11, which permits spring 36 to contact metal strip 35 at the side of ratchet-wheel 11, so that current may pass between spring 36 and shaft 9.) Next press the T or tens key nine times in succession, causing nine electrical impulses to pass from battery D through battery-wire 56 to magnet 12, thence by wire 62 to spring 36, contact-strip 35 and shaft 9 to pin 32, thence to insulated pin 33, then by wire 63 to wire 64, then wire 65 to the key T or tens-key to ground. (It will be noted that when the tens-key is pressed the first time the shaft 9 is lifted longitudinally one step, which causes the auxiliary switch-arm to contact one of the pins 21 of the auxiliary switch, and thus make both an electrical and mechanical connection, whereby the thrusts of the pawl 14′ will turn shaft 9 with ratchet-wheel 15; but in this instance the shaft is

lifted nine steps, when each of the wipers 22, 22′, and 22″ is even with the ninth row, counting from the bottom row, of contact-points 25 in each group.) Next press the U or units key five times in succession, causing five electrical impulses to pass from battery D through wire 56, then wire 57 to one-spool magnet 42, then by wire 58 to magnet 13 and wire 59 to wire 60 and 61 to the U or units key to ground. (It will finally be noted that the first time this units-key is pressed shaft 9 is rotated one step forwardly, which separates strip 35 from spring 36, Fig. 13[B], and also separates pin 32 from insulated pin 33, Fig. 16, and it will be impossible to pass a current through the magnet 12, and thereby any injury to the contact-points or wipers by the longitudinal movements of the shaft after it has been rotated one or more steps will be prevented.) Every time the U or units key is pressed arm 53 of the armature of magnet 13 contacts insulated spring 52, which causes an electric current to pass from the small battery E, Fig. 14, which controls the releasing mechanism hereinbefore referred to, through wire 67 to one-spool magnet 41, thence by wire 68 to spring 52, thence through arm 53 and base 8, to which it is pivoted, to shaft 9 and to arm 20 of the auxiliary switch, which arm is in contact with the second contact-pin thereof, as shown in Fig. 9[D], thence by wire 23′ to wiper 22′ to contact-point No. 295 of group 24′, Figs. 1 and 2, thence by an interconnecting wire 27[A] to connecting-wire 69 of exchange-machine, Fig. 15 or Fig. 18, as the case may be, then by wire 63′ (of this exchange No. 295) to and through wire 64′ to telephone-lever 70′, then wire 74′ to the generator 75′, then wire 76′ to the ringer-magnets 77′, then wire 59′ to magnet 13′, then wire 58′ to magnet 42″, thence through wire 57′ to battery-wire 56 and wire 73 to small battery E, Fig. 14, which completes this circuit and energizes the magnet 41. This electric current last described in passing over this circuit must pass either through the ringing-magnets of the bell or the telephone or in passing over the lines of two substations connected together the current is divided and passes over both circuits. Usually the bell-magnets are of high resistance—say one thousand ohms—and the telephone is of low resistance—say one hundred ohms. This current from small battery E in passing over this circuit, as described, if it passes through the high-resistance bell-ringer magnets is not of sufficient strength to hold the armature or arm 42′ against magnet 41 after magnets 13 and 42 are deënergized, thus permitting the arm 42′ to fall back into normal position and complete the talking-circuit with any substation with which connection has been made. The two telephones Nos. 367 and 295 are now in connection, and the ringing-circuit is from generator 75, Fig. 14[A], through wire 76, ringer-magnets 77, wire 59, and magnet 13, then wire 58, magnet 42, and through wires 57, 56, and 57′, Fig. 15, to magnet 42″, then wire 58′ to magnet 13′, wire 59′ to ringer-magnet 77′, Fig. 15[A], then by wire 76′, generator 75′, wire 74′, telephone-lever 70′, wire 64′, wire 63′, then connecting-wire 69 to the interconnecting-wire 27[A] to wiper 22′ of exchange-machine, Fig. 14, as shown in proper position in Fig. 16, then through wire 23′, contact-point No. 2 of the auxiliary switch, and then the switch-arm 20 thereof, shaft 9, base 8, and arm 42′, spring 45, wires 63 and 64, telephone-lever 70 of telephone set No. 367, Fig. 14[A], wire 74, and to generator 75, which completes the ringing-circuit. The telephones Nos. 367 and 295 are now removed from their levers 70 and 70′, when the talking-circuit is established, the mechanism of the exchange-machine in Fig. 16 being shown in the operated position connecting the two telephones. This talking-circuit is the same as the ringing-circuit, with the exception of the ringers and the generators therefor, which are cut out and the telephone switched in. While these two telephones are off their respective levers, should any one attempt to make a connection with either of the already-connected telephone—say a person at telephone 118, Fig. 17[A], should attempt to call a person at telephone 295, Fig. 18[A], and presses the H or hundreds key twice and the T or tens key nine times and the U or units key five times—every time he presses the units-key he closes the contact between arm 53 and spring 52, the electric pulsations from small battery E″ in passing over the circuit, which includes the low-resistance telephone 295, being of sufficient strength to hold the arm 42′ against magnet 41 and permit the insulated contact 44 of spring 45 to fall back of and contact the free end of arm 42′, whereby the circuit is broken, in which event it is obvious that the bells of neither one of the connected parties can be sounded nor their conversations be heard.

In each of the diagrammatic views is a separate small battery E, E′, or E″ for each exchange-machine in order to show as small a number of exchange interconnecting-wires as possible; but it must be understood in practice that one small battery, such as E, of less power than battery D serves for several or the whole number of exchange-machines at the central station.

To cause the several operative parts to return to the normal position after a conversation, magnet 13 is first electrically energized and the current is not cut out until after magnet 12 is energized, which, through the pin 14″ and tailpiece 10″, causes the detents and pawls to successively lift from their respective ratchets, when shaft 9 is first revolved backwardly and then slides downwardly to the position shown in Figs. 1 and 2. In the downward movement of the shaft the auxiliary switch is caused to resume the released or normal position by the lower end of the downwardly-projecting arm 15″ contacting the frame 8 before the shaft 9 has reached its lowest position, which causes the

boss 17 and the contact-point holder 18, which are secured to the shaft, and by the downward motion thereof to withdraw any contact-point 21 which may be engaged with hole 20′ in the auxiliary switch-arm 20, when the resiliency of spring 15′ causes a backward movement of the ratchet-wheel 15 to the normal position, with projection 15″ resting against projection 19 of the contact-point holder 18, Fig. 9[c].

It will be noted that since the boss 17 and the contact-point holder 18 are secured to shaft 9 these two parts are first carried around to the normal position shown in Figs. 1 and 2 with the first backward revolution of the shaft and that the ratchet-wheel 15 is revolved on the shaft, together with the auxiliary switch-arm 20, always after the shaft has reached its lowest position. The shaft 9 being mounted to operate longitudinally in a vertical direction, it is obvious that most of the weight thereof may be counter balanced by the upward pull of spring 34, and since a step-bearing is provided at the lower end upon the pointed upper end of rod 30, which is disposed within spring 31, friction in the bearing thereof is reduced to a very small amount, even when the shaft is made much longer than is shown in the drawings, to receive an additional number of switch-arms, when an adtional number of groups of contact-points are necessary in large exchanges.

We claim as our invention—

1. In an electrical exchange, the combination, with a series of contact-points arranged in groups, of a switch provided with an arm for each group, a series of contact-points mounted independently of the switch but in electrical communication with the different arms, and a selector or auxiliary switch-arm rotatably and longitudinally movably mounted upon the first-mentioned switch, and means for establishing electrical communication with either of said groups through said selector, substantially as set forth.

2. In an electrical exchange, the combination, with a series of contact-points arranged in groups, of a shaft provided with an arm for each group, a series of contact-points in electrical communication with said arms, a selector or auxiliary switch rotatably and longitudinally mounted upon said shaft, the contact end of which is normally out of engagement with said second-mentioned contact-points, and means for rotating the selector, and means for moving the shaft longitudinally, whereby contact is made between the selector and one of the points, only after the selector has been moved one or more steps from its normal position, substantially as set forth.

3. In an electrical exchange having a shaft with a plurality of switch-arms insulatingly attached thereto and each adapted to contact any one of some group of contact-points by virtue of either a rotary or a combined rotary and longitudinal movement of the shaft, an auxiliary switch mounted on the shaft and consisting of a series of insulated contact-points each having electrical connection with some one of the switch-arms, a ratchet-wheel loosely mounted upon the shaft to revolve or slide longitudinally thereon and having an arm attached thereto which forms a terminal in electrical connection with a substation, the first rotary step-by-step movements of the ratchet-wheel adapted to cause the arm attached thereto to register with some one of the said insulated contact-points without turning the shaft, but the first longitudinal movement of the shaft couples the arm with the contact-point with which it is in register, whereby any subsequent step-by-step rotary movements of the ratchet-wheel cause the shaft to revolve in unison therewith for the purpose stated.

4. In an electrical exchange, the combination, with contact-points, of a longitudinally-movable shaft, a selector thereon, a lock for the shaft, said selector and lock being in such relation to each other and to the shaft, that when the shaft is moved the first step longitudinally it will engage with the selector and will become disengaged from the lock, substantially as set forth.

5. In an electrical exchange, the combination, with contact-points, of a longitudinally-movable shaft provided with a series of pins arranged parallel therewith, a platform, a lock, and a selector provided with two arms, one of which normally rests upon the platform and the other one is adapted to be placed in engagement with the pins, said parts being in such relation to each other that when the shaft is moved the first step longitudinally it will simultaneously cause the pins to engage with one of the arms of the selector and to become disengaged from the lock, and when it is moved the last step in the opposite direction it will be simultaneously disengaged from the lock and the pins will be disengaged from the arm of the selector, substantially as set forth.

6. In an electrical exchange having a switch or connector, of an auxiliary switch or selector, motor-magnets for operating the same, a circuit for each magnet, two single-spool electromagnets, one of which is in the circuit of one of the motor-magnets, a separate circuit for the other spool, a cross-piece and an armature common to both of said single-spool magnets, the armature being adapted to lock the switch, substantially as set forth.

7. In an electrical exchange, the combination, with a series of lines from distant stations, of a series of connectors at the exchange, one for each line, motor-magnets for each connector, a cut-out for each line between the connector and the distant station, an electrical circuit for the cut-out including the connector and the cut-out, and means for automatically passing a current of electricity

through the cut-out circuit to disconnect its connector from either of two connected lines, substantially as set forth.

8. In an electrical exchange, the combination, with a support, of a shaft journaled vertically therein and provided with contact-arms, of a spring-actuated vertically-movable step at the bottom of the shaft, means for moving the shaft upwardly step by step and means for releasing the same and permitting the shaft to automatically resume its normal position, substantially as set forth.

9. In an electrical exchange, the combination, with a support, of a shaft journaled therein and provided with contact-arms, of contact-points, an arm pivotally secured at the lower portion of the support, a rod in the arm, the upper end of which acts as a step for the shaft, a spring connected with the arm for partially counteracting the weight of the shaft, and means for moving the shaft upwardly step by step, and means for releasing the same and permitting the shaft to resume its normal position, substantially as set forth.

10. In an electrical exchange, the combination, with supports, of a shaft journaled therein provided with contact-arms, contact-points, an arm pivotally secured at the lower end of the support, a rod in the arm, the upper end of which acts as a step for the shaft, a spring secured to the arm and to the lower end of the shaft and surrounding the rod and shaft, and means for moving the shaft upward step by step, and means for releasing the same and permitting it to automatically resume its normal position, substantially as set forth.

In testimony that we claim the foregoing we have hereunto set our hands, this 19th day of August, 1895, in the presence of witnesses.

ALEXANDER E. KEITH.
JOHN ERICKSON.
CHARLES J. ERICKSON.

Witnesses:
JOSEPH HARRIS,
OSCAR SNELL.