United States Patent [19]

Baer

[11] **3,728,480**

[45] **Apr. 17, 1973**

[54] **TELEVISION GAMING AND TRAINING APPARATUS**

[75] Inventor: **Ralph H. Baer,** Manchester, N.H.

[73] Assignee: **Sanders Associates, Inc.,** Nashua, N.H.

[22] Filed: **Mar. 22, 1971**

[21] Appl. No.: **126,966**

Related U.S. Application Data

[63] Continuation of Ser. No. 697,798, Jan. 15, 1968, abandoned.

[52] **U.S. Cl.** **178/6.8,** 178/6, 178/DIG. 1

[51] **Int. Cl.** **H04n 7/18**

[58] **Field of Search** .....273/101.1, 101.2; 315/22, 26, 30, 10, 18; 178/DIG. 4, 7.83, DIG. 6

[56] **References Cited**

UNITED STATES PATENTS

2,489,883	11/1949	Hecht	250/217 CR
2,552,022	5/1951	Watson et al.	315/26
2,595,646	6/1952	Doba, Jr. et al.	328/187
2,648,724	8/1953	Enslein	178/6 TT
2,956,116	10/1960	Singleman	178/6 TT
3,014,724	12/1961	Cryder et al.	178/7.83
3,046,676	6/1962	Hermann et al.	35/25
3,151,248	9/1964	Glaser et al.	273/101.1
3,401,331	9/1968	Mussulman	178/6 TT
2,621,246	12/1952	Clayden et al.	178/DIG. 6
1,180,470	6/1959	France	

FOREIGN PATENTS OR APPLICATIONS

OTHER PUBLICATIONS

Radio and Television News; August 1956, pp. 63.
Radio Electronics, May 1956, pp. 38.

Primary Examiner—Richard Murray
Attorney—Louis Etlinger

[57] **ABSTRACT**

The present invention pertains to an apparatus and method, in conjunction with standard monochrome and color television receivers, for the generation, display, manipulation, and use of symbols or geometric figures upon the screen of the television receivers for the purpose of training simulation, for playing games, and for engaging in other activities by one or more participants. The invention comprises in one embodiment a control unit, connecting means and in some applications a television screen overlay mask utilized in conjunction with a standard television receiver. The control unit includes the control means, switches and electronic circuitry for the generation, manipulation and control of video signals which are to be displayed on the television screen. The connecting means couples the video signals to the receiver antenna terminals thereby using existing electronic circuits within the receiver to process and display the signals. An overlay mask which may be removably attached to the television screen may determine the nature of the game to be played or the training simulated. Control units are provided for each of the participants. Alternatively, games, training simulations and other activities may be carried out in conjunction with background and other pictorial information originated in the television receiver by commercial TV, closed-circuit TV or a CATV station.

46 Claims, 26 Drawing Figures

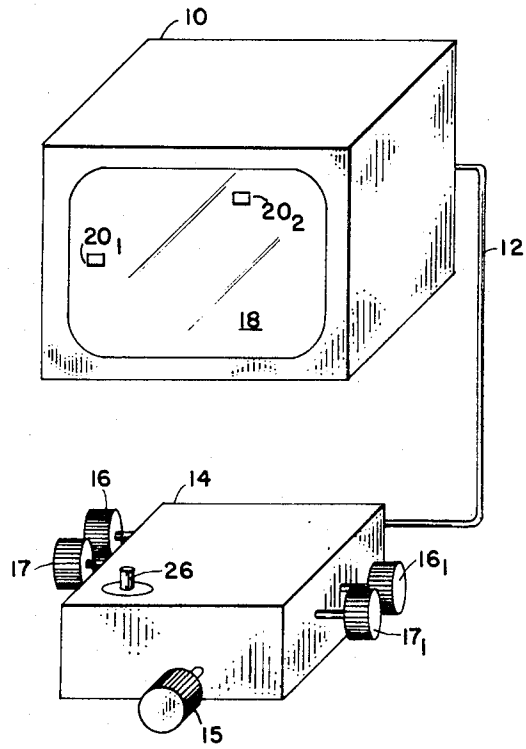

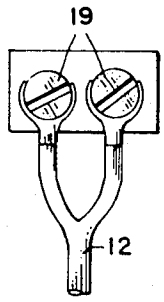

FIG. 1A

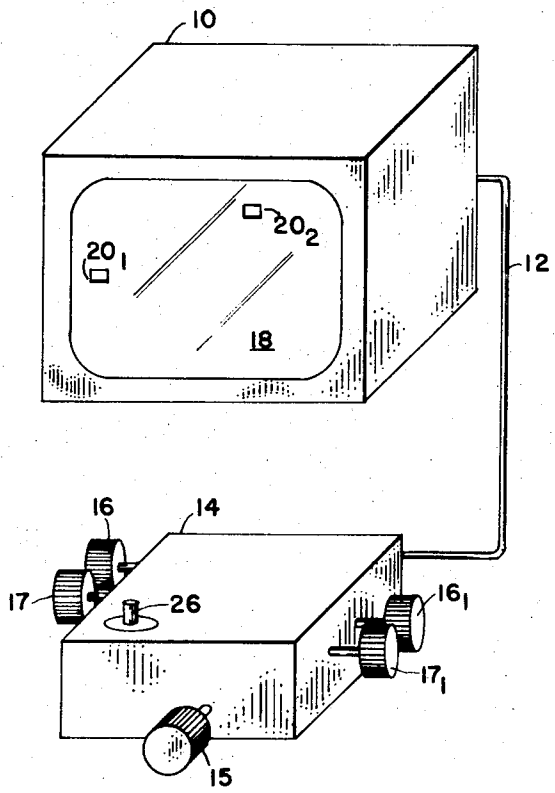

FIG. 1

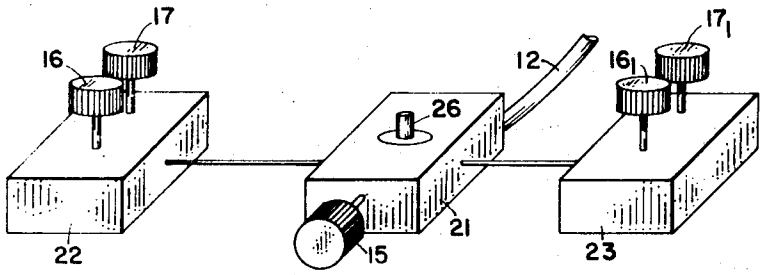

FIG. 1B

INVENTOR
RALPH H. BAER
BY Richard S. Seligman
ATTORNEY

FIG. 1C

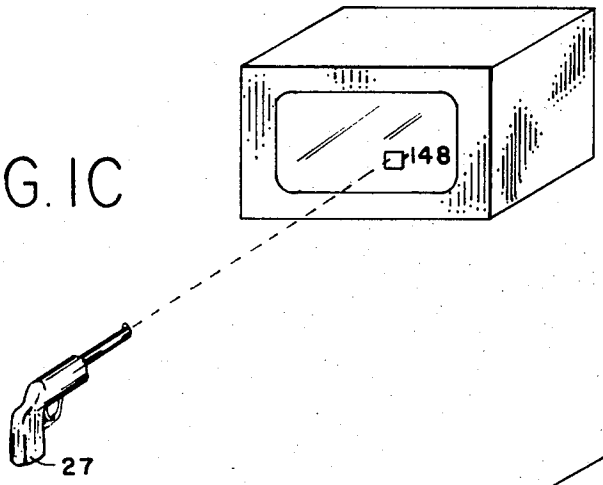

FIG. 1D

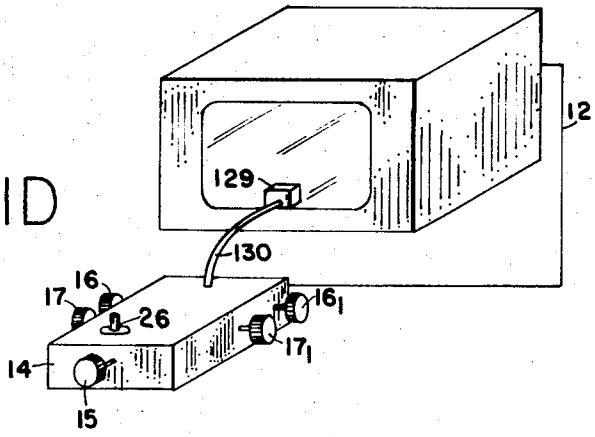

FIG. 1E

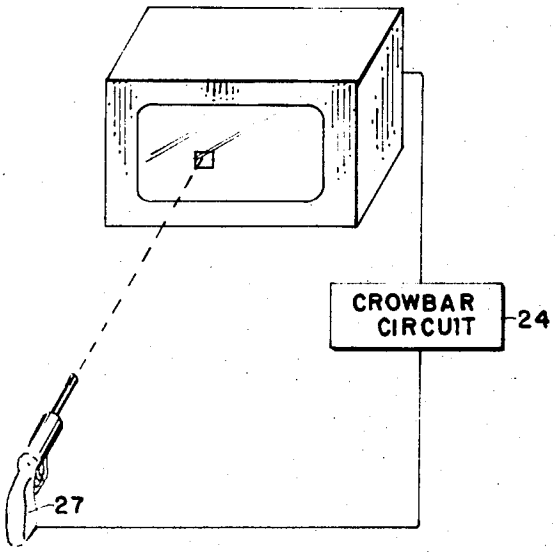

INVENTOR

RALPH H. BAER

BY Richard S. Seligman

ATTORNEY

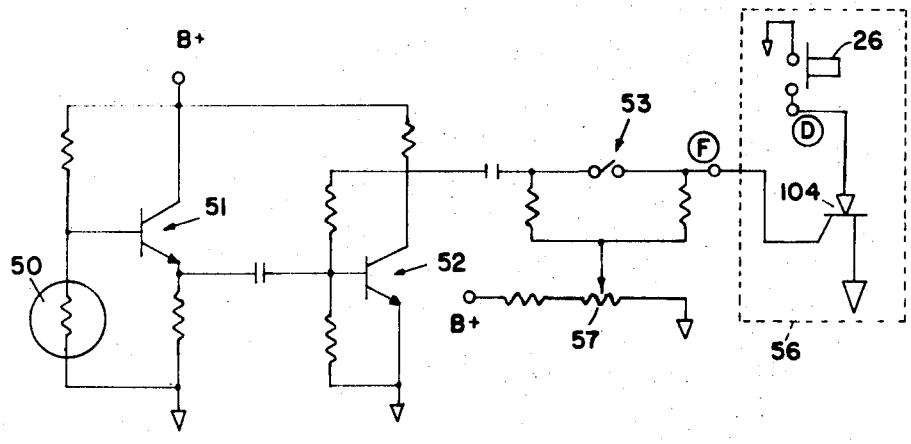

FIG. 4

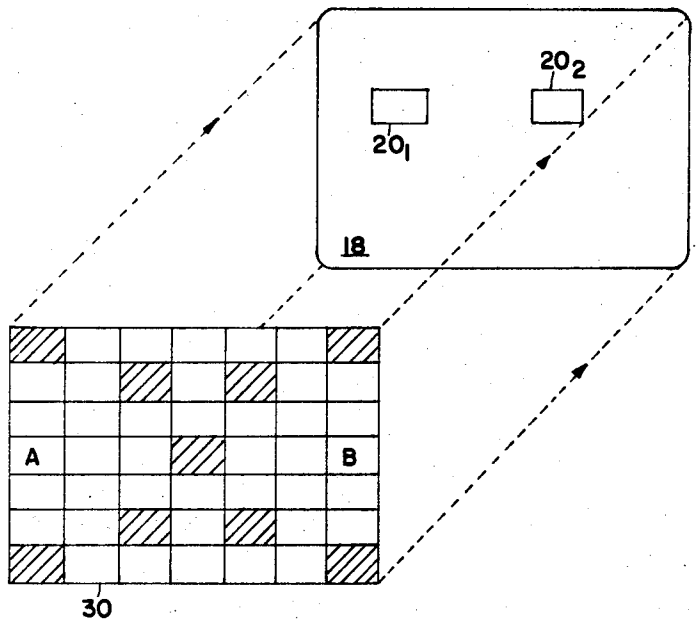

FIG. 2

INVENTOR

RALPH H. BAER

BY Richard J. Seligman

ATTORNEY

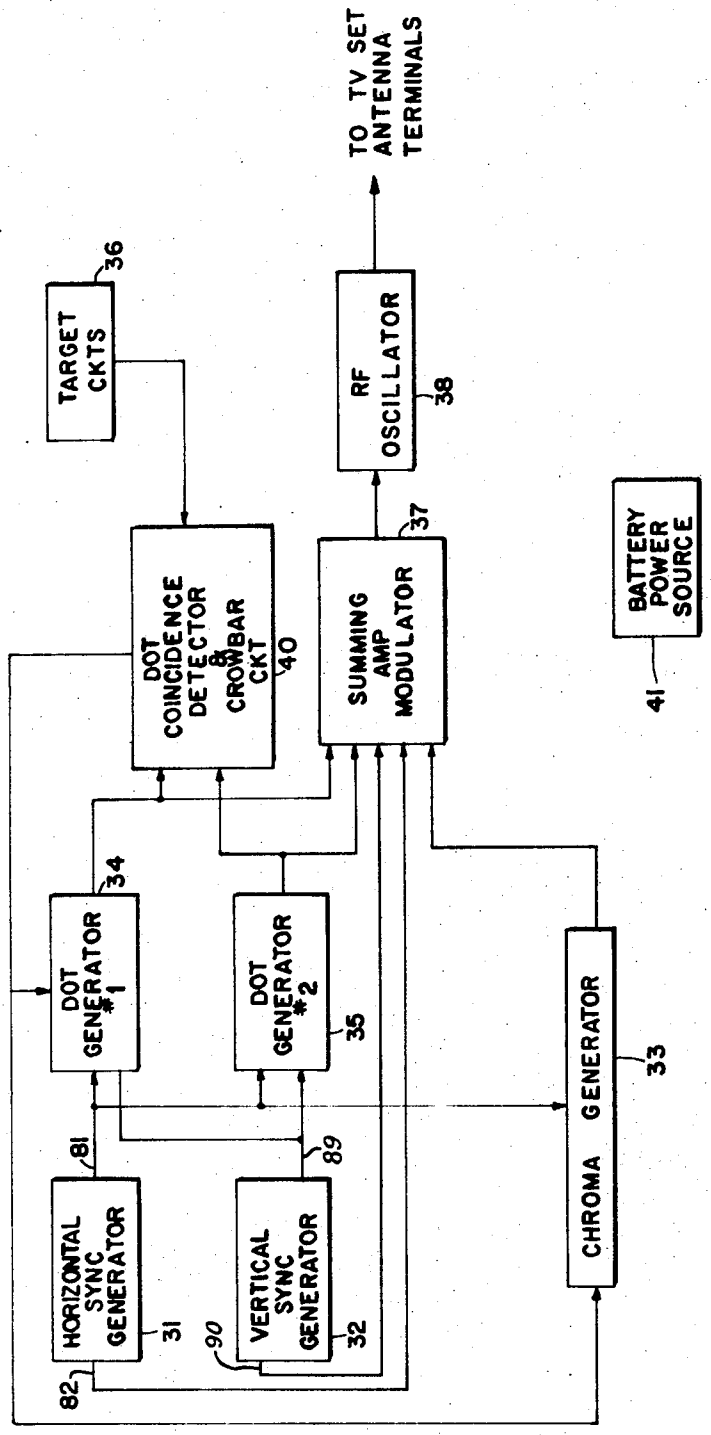

FIG. 3

INVENTOR

RALPH H. BAER

BY Richard A. Seligman

ATTORNEY

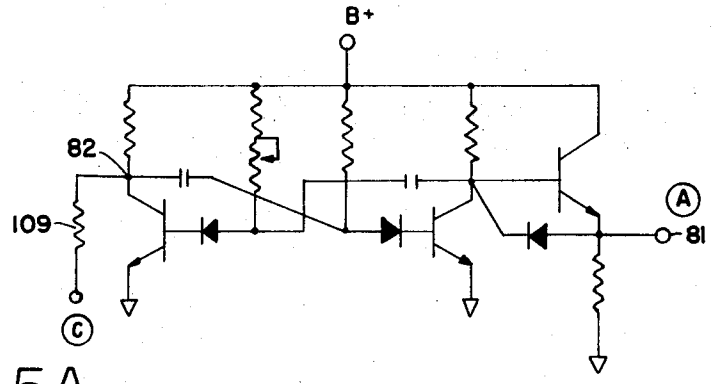

FIG. 5A

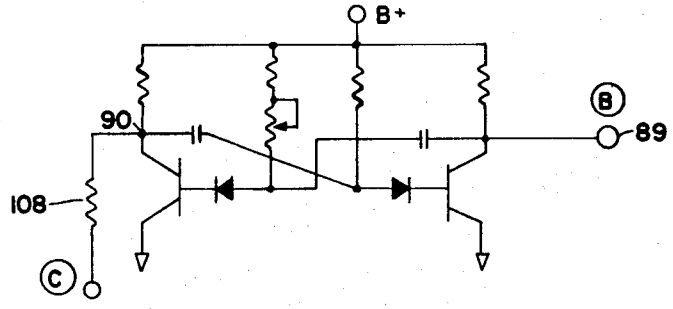

FIG. 5B

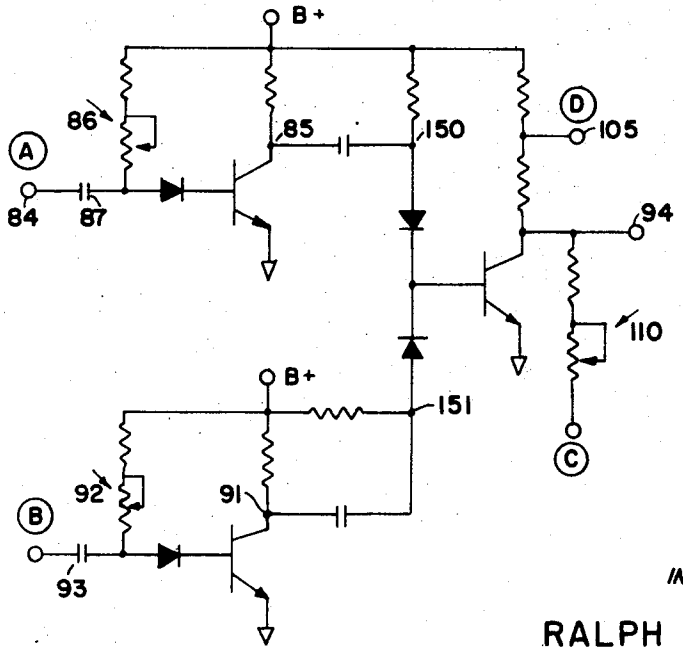

FIG. 5C

INVENTOR

RALPH H. BAER

BY Richard J. Seligman

ATTORNEY

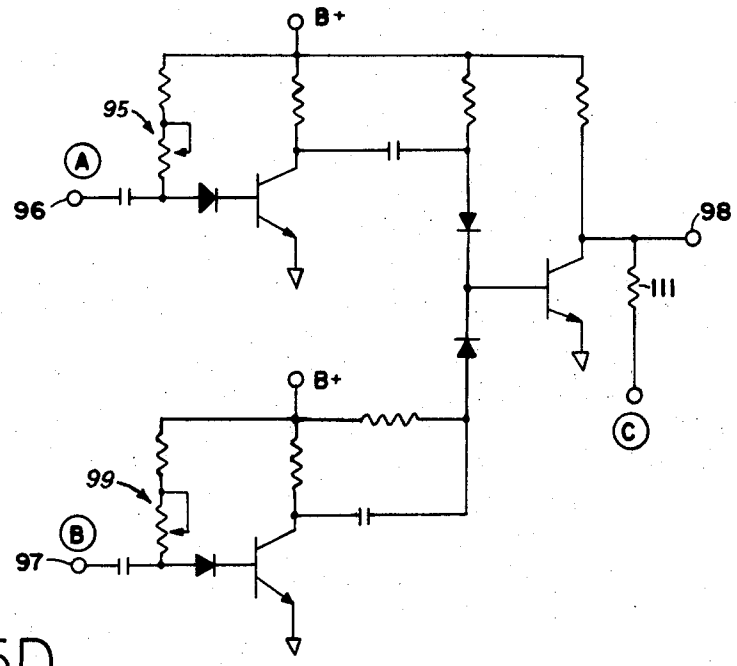

FIG. 5D

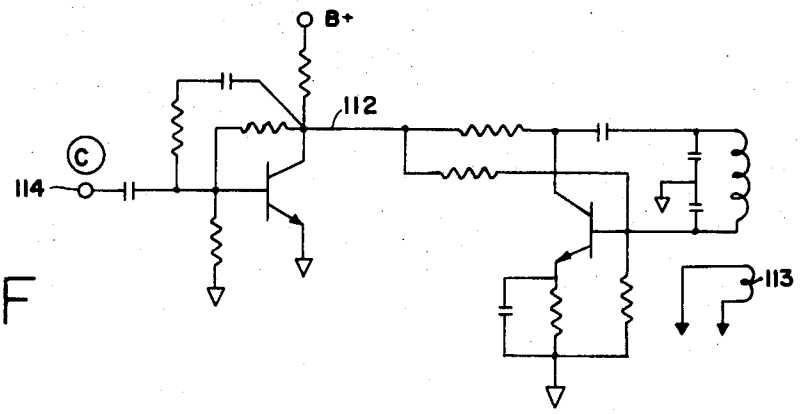

FIG. 5F

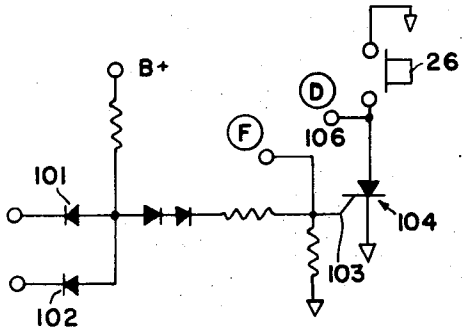

FIG. 5E

INVENTOR

RALPH H. BAER

BY

Richard S. Seligman

ATTORNEY

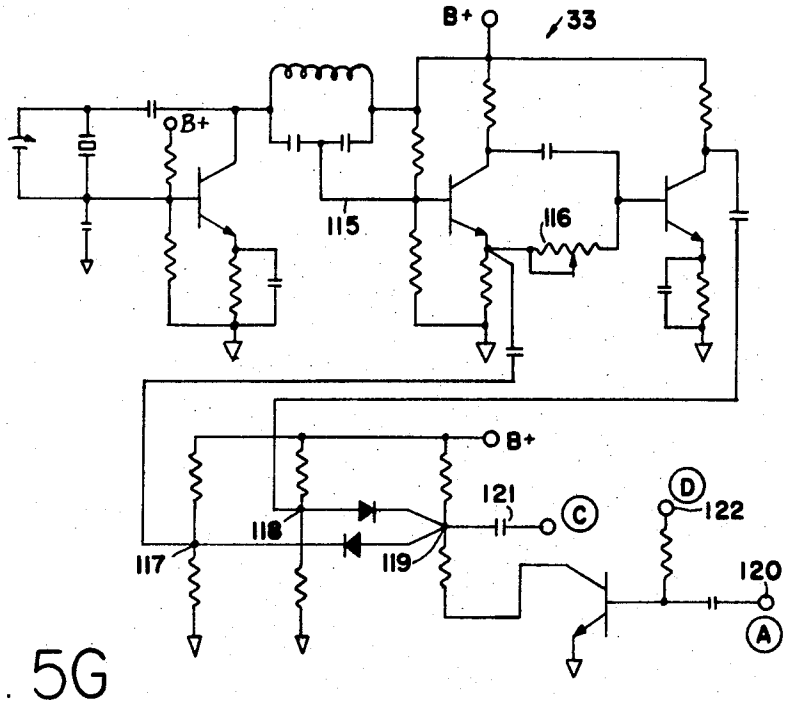

FIG. 5G

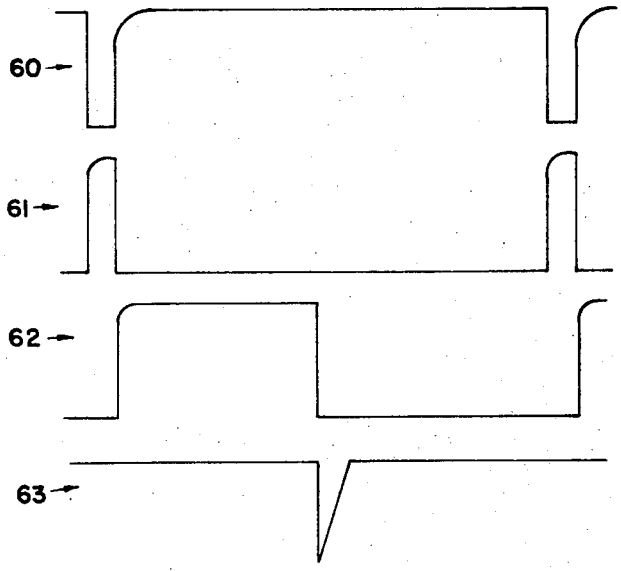

FIG. 6A

INVENTOR

RALPH H. BAER

BY

Richard J. Seligman

ATTORNEY

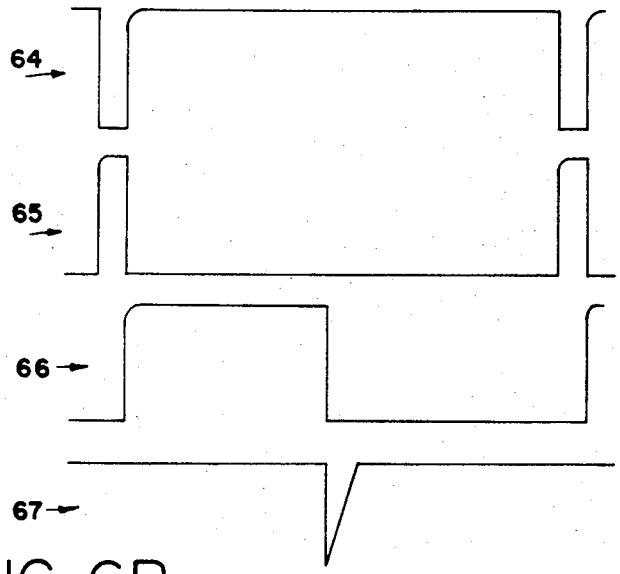

FIG. 6B

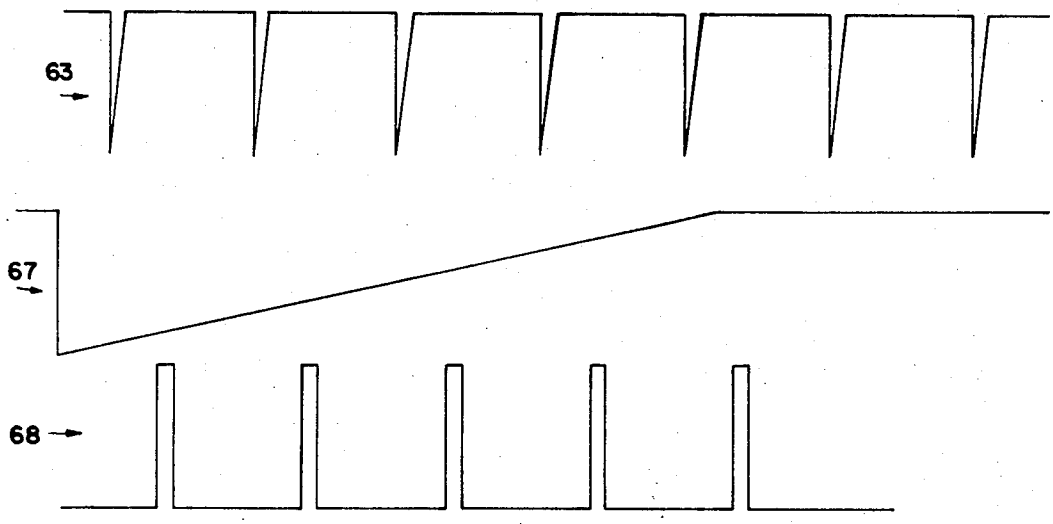

FIG. 6C

INVENTOR
RALPH H. BAER
BY Richard J. Seligman
ATTORNEY

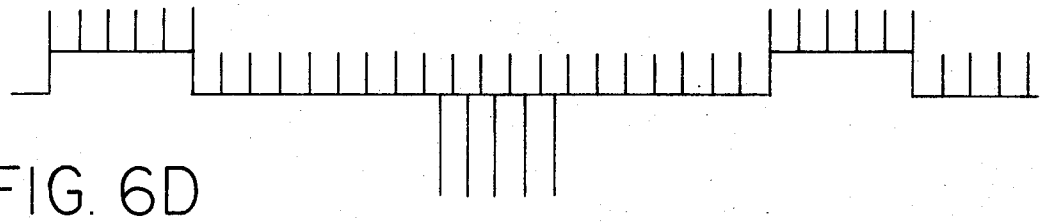

FIG. 6D

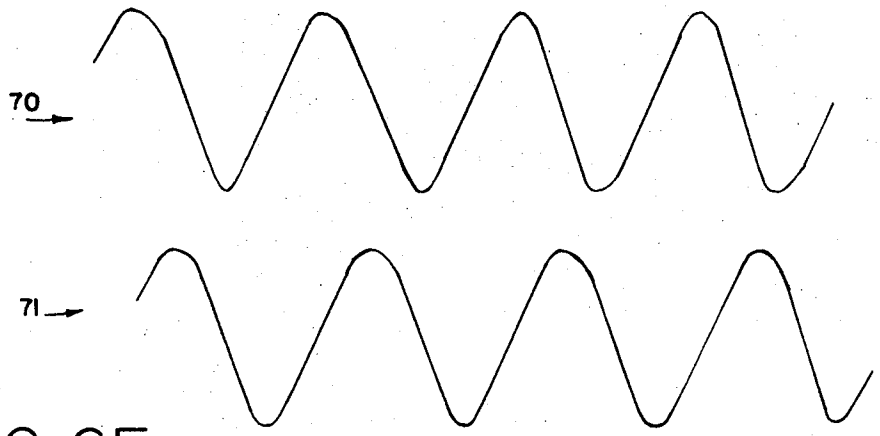

FIG. 6E

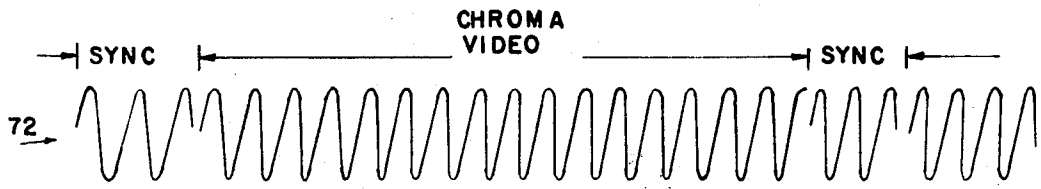

FIG. 6F

INVENTOR

RALPH H. BAER

BY Richard S. Seligman

ATTORNEY

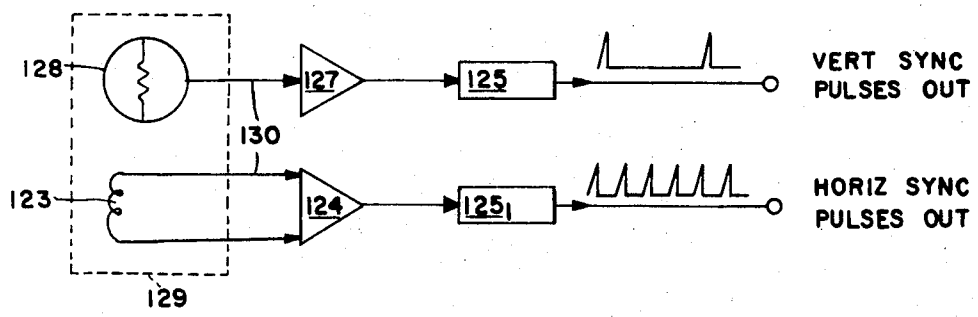

FIG. 7

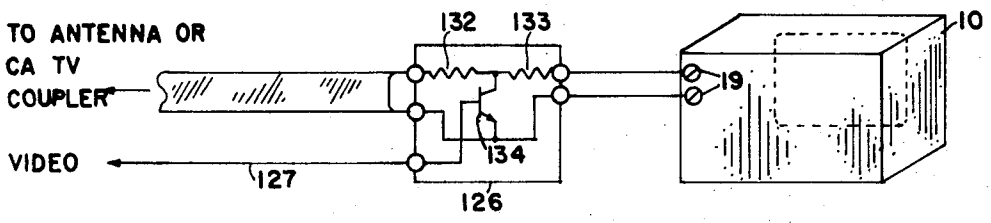

FIG. 8

INVENTOR

RALPH. H. BAER

BY Richard J. Seligman

ATTORNEY

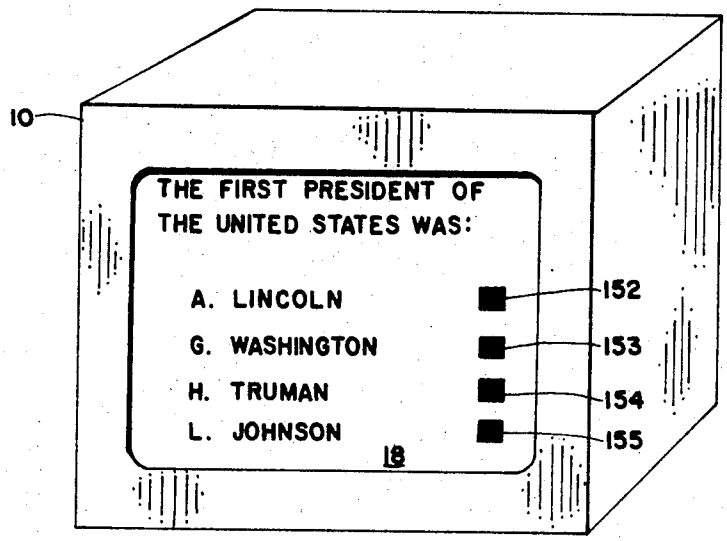

FIG. 9

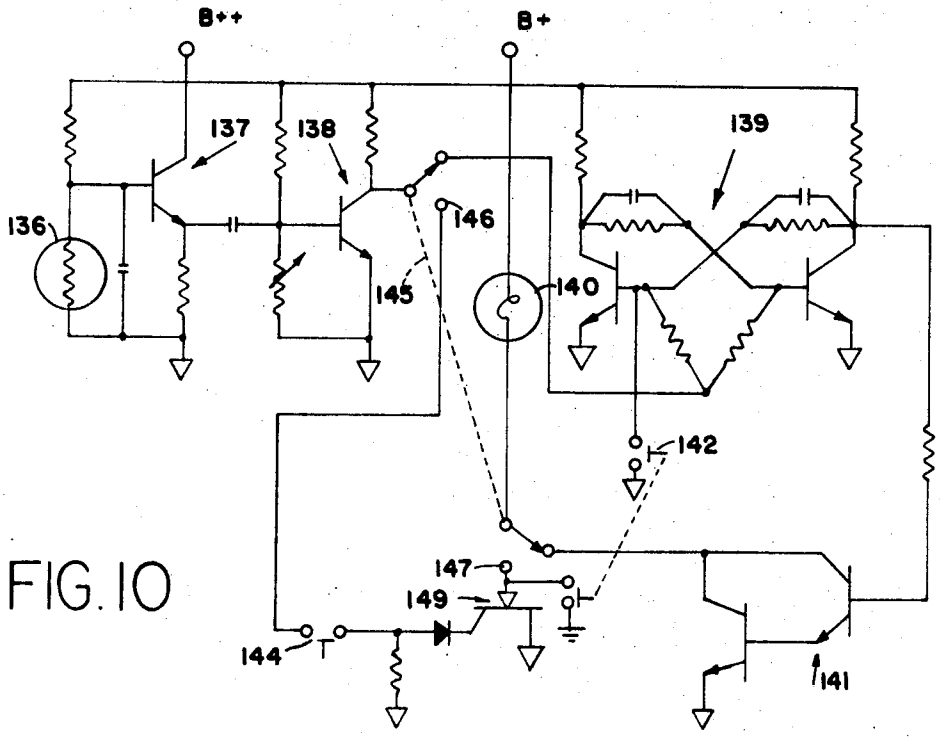

FIG. 10

INVENTOR
RALPH H. BAER
BY Richard S. Seligman
ATTORNEY

TELEVISION GAMING AND TRAINING APPARATUS

This is a continuation of application Ser. No. 697,798 filed Jan. 15, 1968 now abandoned.

BACKGROUND OF THE INVENTION

The invention relates to an apparatus and method by means of which standard television receivers can be utilized as active rather than passive instruments. This is accomplished by certain embodiments having participants manipulate controls of a control unit connected to the television receiver to cause a symbol, such as a rectangle, bar, "dot" or a pair of dots to be displayed upon the television screen by means of which the participants can play a variety of games, participate in simulated training programs, as well as carry out other activities. By way of example, modified versions of the well-known game of checkers may be played by two participants by placing an appropriate mask representing the checker board upon the screen of the television receiver. For a simulated training program, "dots" displayed on the TV screen could represent ships which would be maneuvered by operating manipulating controls.

Heretofore, color and monochrome television receivers have been used by the home and other viewers only as passive devices; i.e., the television receiver is used only as a display means for programming originating at a studio. The viewer is limited to selecting the presentations available for viewing and is not a participant to the extent that he can control or influence the nature of, or add to the presentation displayed on the receiver screen. A standard receiver is employed with auxiliary equipment to provide an active form of home entertainment. Since most homes are equipped with television receivers, the only expense required to provide added family enjoyment is the expense of a control unit of one type or another.

It is, therefore the primary object of the present invention to provide an apparatus and methods for displaying video signals upon the screen of a television receiver, where some or all of the video signals are both generated and controlled by the viewer.

It is another object of the present invention to provide an apparatus and method wherein a standard color or monochrome television receiver is utilized as an active instrument for simulated training programs and to play various types of games involving one or more participants.

It is a further object of the present invention to provide a device whereby an individual may pit his alertness, skill, manual dexterity and visual acuity on automatically controlled video displays.

It is still another object of the present invention to provide an apparatus which will also provide visual indication of the results of the games played and the simulated training programs.

It is yet a further object of the present invention to provide an apparatus which will generate "dots" or other geometric figures such as squares, rectangles, bars, stripes, etc. Which may be controlled by one or more participants for playing various types of games and for training simulation by the display and utilization of the "dots."

It is yet another object of the present invention to provide an apparatus which may allow one or more

participants to use a standard television set while receiving background and other pertinent pictorial information from a cooperative commercial TV, closed-circuit TV, or CATV station, thus combining or alternating studio and home-generated information on the TV screen.

It is still another object of the present invention to allow the use of a standard TV set for gaming or other activities without the need for any kind of internal electrical connection to the TV set for the introduction of video and/or chroma signals, connections being required to be made only to the externally accessible antenna terminals.

It is still another object of the present invention to provide for interrogating a standard TV receiver through an optical photosensor in a manner allowing the identification of a suitably time-or frequency-coded message, not interpretable by the unaided eye, such message having been originated in the TV viewers equipment by a cooperative commercial TV, closed-circuit TV or CATV station.

It is still a further object of the present invention to provide apparatus for decoding messages on a TV screen.

SUMMARY OF THE INVENTION

In accordance with one embodiment of the present invention a television gaming apparatus is provided for generating video signals in accordance with the standardized television format, which signals may be controlled by an individual operator by means of a joystick or other manually operative means. The television gaming apparatus comprises a control box having enclosed therein all the necessary electronic circuits to produce video signals which are compatible with standard television receivers, both monochrome and color.

The control box has video signal control means mounted thereon for easy access and connecting means are provided for coupling the video signals generated within the control box to the television receiver. There is also provided suitable overlay masks which are adapted to be removably secured upon the television screen. These masks permit playing of games and training simulation which are adaptable to display upon a television screen.

By way of illustration, the television gaming apparatus can be used for electronic target shooting by providing a gun having a photo-electric cell which is activated when a trigger is depressed. Thus, when the gun is aimed at a "dot" displayed on the television screen, which "dot" serves as the target, and the trigger is depressed, a hit will be indicated directly on the television screen by a visual display when the photoelectric cell is in alignment with the "dot." The "dot" which serves as the target may be either fixed or moveable and can be swept across the screen in a predetermined or random fashion, at either a fixed or variable rate, either manually or automatically.

By way of further illustration, games may be played in which a cooperative TV station (commercial, closed-circuit or CATV) provides background data such as scenery for a simulated turkey-shoot game, or such as checkerboard game backgrounds, time-left-to-play-clocks and innumerable others designed to enhance the appeal of the activity. A cooperative TV

station can also provide targets for a target shooting game as well as messages to be decoded. For example, tests questions could be displayed on the TV screen with a multiple set of answers whereby the correct answer is coded in such a manner that a photocell circuit would detect the coding signifying selection of the correct answer.

From the above illustrations it will be apparent to those skilled in the art, that the present invention exhibits a great latitude of versatility.

BRIEF DESCRIPTION OF THE DRAWINGS

The aforementioned and other objects, features and advantages of the present invention will become more apparent from the following detailed description thereof when considered in conjunction with the drawings wherein:

FIG. 1 is a pictorial view illustrating the principal components of one embodiment of the invention;

FIG. 1A is a sketch illustrating the manner in which the components of the embodiment of FIG. 1 are connected;

FIG. 1B is a pictorial view illustrating an alternate embodiment for the control unit of FIG. 1;

FIG. 1C is a sketch showing a "light-gun" containing a photocell and electronic circuits.

FIGS. 1D and 1E are sketches illustrating the manner in which the components of the embodiment of FIG. 1 may be connected when used with a cooperative TV station.

FIG. 2 is a sketch illustrating a TV screen and overlay mask as employed in the embodiment of FIG. 1;

FIG. 3 is a block diagram of the control unit of FIG. 1;

FIG. 4 is a schematic illustrating the electronics for a target shooting game;

FIGS. 5A–5G are schematics of the blocks of FIG. 3;

FIGS. 6A–6F are waveforms (not drawn to scale) illustrating operation of the schematics of FIG. 5;

FIG. 7 is a schematic illustrating the method of extracting horizontal and vertical synchronization pulses from a TV receiver without making internal connections, when using a signal broadcast by a cooperative TV station;

FIG. 8 is a sketch illustrating apparatus for modulating a received TV signal by a video and/or chroma signal generated by the control unit of FIG. 1;

FIG. 9 is a sketch illustrating the TV screen of a receiver employed in a coded information mode; and

FIG. 10 is a schematic of a decoder used to decode the information present on the TV screen of FIG. 9.

DESCRIPTION OF PREFERRED EMBODIMENTS

The principal components of one embodiment of a television gaming system configured according to the invention are illustrated in FIG. 1 which is a pictorial view showing a television receiver **10**, a control unit **14** and means **12** for connecting control unit **14** to receiver **10**. The television receiver **10** employed can be any of the standard commercially available models that are generally used for home entertainment. Either a monochrome or color television set may be used with the present invention since the basic principles of the invention apply to both types. The connection means **12** is in this embodiment a shielded cable, for example, shielded twin lead and is attached to the antenna terminals of receiver **10** in conventional fashion (see FIG. 1A).

Control unit **14** generates video signals shown as "dots" $\mathbf{20_1}$ and $\mathbf{20_2}$ which are positioned on the receiver screen **18** by knobs **16**, **17**, and $\mathbf{16_1}$, $\mathbf{17_1}$, respectively. In this embodiment the "dots" **20** are squares or rectangles. However, any geometric shape is applicable. Knob **16** controls the vertical position of dot $\mathbf{20_1}$ while knob **17** controls the horizontal position thereof. Thus, it can be seen that the dot $\mathbf{20_1}$, may be positioned at any point on the screen by the proper manipulation of knobs **16** and **17**. Dot $\mathbf{20_2}$ is positioned in like manner by knob $\mathbf{16_1}$, $\mathbf{17_1}$. A reset switch **26** is shown on the control unit **14** and is used to reset the picture on the television screen. For example, a game may be played in which one dot is to be positioned over the other and when this is accomplished one dot will disappear when a monochrome set is used, while in a color set, the dot will disappear and the background will change color. When games of this nature are played, a reset means is required before play can be resumed. Reset switch **26** performs this function.

A knob **15** controls background color for color TV receiver applications. Alternatively, control unit **14** may be broken up into a master control unit containing the electronic circuits and individual control units containing control knobs **16**, **17** and $\mathbf{16_1}$, $\mathbf{17_1}$, whereby each participant may operate from a position not proximate the other and so not to interfere with other players. This is illustrated in FIG. 1B wherein control unit **14** is broken up into a master control unit **21** and individual control units **22** and **23**. The master control unit **21** contains the electronic circuitry found in control unit **14** and controls **26** and **15**. Knobs **16**, **17** and $\mathbf{16_1}$, $\mathbf{17_1}$ which position the dots $\mathbf{20_1}$ and $\mathbf{20_2}$ are situated on individual control units **22** and **23** respectively.

The knobs **16**, **17** may be combined into a single joystick permitting control of the horizontal and vertical dot positioning by a single control means.

Rather than provide a separate control unit, the control unit could be built into the television receiver as a constituent part thereof and the receiver sold as both an active and passive home entertainment system.

A typical sequence of steps to play a game using the present invention would be as follows: 1. Attach connection means **12** to TV set **10** at antenna terminals **19** if not already attached; 2. turn TV set on; 3. select the proper channel on the set for the control unit being used; 4. apply power to the control unit; 5. attach a mask on the face of the TV screen, if required for the game to be played; 6. begin the game.

Referring now to FIG. 2, a television screen **18** is illustrated having two "dots" $\mathbf{20_1}$ and $\mathbf{20_2}$ displayed. An overlay mask **30** of some type of transparent material such as plastic or the like, having some type of pattern, picture or other illustration pertaining to the particular game to be played is shown in a lifted position. Prior to engaging in a game, the overlay mask **30** would be temporarily attached to television screen **18** and in such close proximity to it as not to create any distortion when viewed with reference to the dots **20**. One type of overlay mask could be a checkerboard pattern to be used for playing a modified game of checkers. Still another pattern could be a maze type, with the object

of the game being to escape within a specified time. These are but a few of the many games that can be adapted for use with the present invention.

Alternatively, rather than employ overlay mask **30**, the pattern to be provided could be displayed directly on the screen **18**. The pattern could be broadcast by TV stations or alternatively could be sent to a non-used channel over closed-circuit or CATV lines. This embodiment is described in greater detail hereinafter with respect to FIGS. **7** and **8**.

The control unit **14** will now be described in detail by referring to the block diagram shown in FIG. **3**. The timing for the television gaming system is established within the control unit by a horizontal sync generator **31** and a vertical sync generator **32**.

The horizontal sync generator **31** employed in this embodiment is a multivibrator whose output is a series of pulses rather than a square wave. The repetition rate of these pulses is the standard horizontal scanning frequency used in commercial television receivers. The positive sync pulse output **81** of the horizontal sync generator **31** is simultaneously applied to a first "dot" generator **34**, a second "dot" generator **35** and a chroma generator **33** (in color TV applications). The negative sync pulse output **82** of the horizontal sync generator **31** is applied directly to a summing amplifier-modulator **37**. The "dot" generators **34** and **35** when triggered by horizontal sync generator **31** generate a pulse which is the horizontal video information portion of the television composite signal that forms the "dots" **20** on the television receiver screen **18**. The manual control knobs **16**, **17** and 16_1, 17_1 on the control unit are attached to the shafts of potentiometers **86**, **92** and **95**, **99** in the dot generator circuits of the "dot" generators **34** and **35** respectively (see FIGS. **5C** and **5D**). Alternatively, a single control such as a joystick could be coupled to knobs **16**, **17** and a second joystick coupled to knobs 16_1, 17_1. Adjustment of these potentiometers establishes the position of the "dots" on the television screen.

The vertical sync generator **32** is coupled to the first and second symbol or "dot" generators **34** and **35** and triggers the "dot" generators to generate a pulse which is the vertical video information portion of the composite television signal. The combination of the horizontal and vertical signals form a "dot" on the television receiver screen. There are two manual control knobs for each "dot". One of the knobs controls the horizontal pulse position while the other controls the vertical pulse position. The output of the "dot" generator which is the delayed horizontal pulses that are gated by the delayed vertical pulse, describes the location of the "dots" on the television screen. The horizontal and vertical video information from the first and second "dot" generators **34** and **35** is summed together in the summing network of summing amplifier-modulator **37**. The summing network is a resistor matrix which sums all the signals presented to one point. Thus the composite video information is formed. The composite video information is then coupled to the modulator portion of summing amplifier-modulator **37** and to r-f oscillator **38** which modulates the video information with the carrier to generate the modulated RF signal. The RF signal is then coupled to the television antenna terminals **19**. The RF signal that is present at the antenna terminals is detected and processed by the television receiver in the standard manner and is displayed upon the screen. The two controllable "dots" are the means by which games may be played.

Alternatively the video signal could be applied internally to the receiver without rf carrier modulation.

The "dot" coincidence detector and crowbar circuit **40** receives an input from both the first and second "dot" generators **34** and **35** taken at outputs **94** and **98** thereof, respectively (see FIG. **5**). When the "dots" 20_1 and 20_2 are coincident, the first "dot" generator **34** is turned off by the "dot" coincidence detector and crowbar circuit **40**. Thus, when one "dot" is superimposed upon the other, one of the "dots" will disappear.

A variety of games may be adapted to use this particular aspect of the television gaming system. For example, a game of fox and hounds may be played with one "dot" representing the fox and other the hounds. When the hounds catch the fox, the fox's "dot" disappears indicating a catch. Any game requiring an indication of when contact is made between two objects may be adapted to this concept.

The chroma generator **33** is used when the control unit **14** is coupled to a color television receiver. Chroma generator **33** may be omitted for monochrome applications. The gaming system for color operation is the same as that for monochrome sets with the exception that the background color in the color receivers may be controlled. A color control knob **15** (see FIG. **1**) is provided on control unit **14** and is coupled to a potentiometer within the chroma generator **33** by which means the background color may be varied throughout its entire color spectrum. The horizontal sync generator **31** provides the trigger signal to the chroma generator **33** whose output is then summed in the summing network of the summing amplifier-modulator **37** with the other portions of video information. The resultant composite video information is then modulated with the carrier in the modulator and r-f oscillator **38**. The RF signal is then coupled as before to the television receiver antenna terminals **19** and is detected, processed and displayed in the standard manner.

One game which may be played employing the concepts of this invention is target shooting. A "toy" gun containing a photocell is electrically coupled to the control unit.

When a game is played using the target gun, also called a "light-gun," hits are shown on the screen by having one of the "dots" disappear. Signals detected by a target gun circuit **36** are used to trigger the crowbar circuit portion of "dot" coincidence detector and crowbar circuit **40**, which turns off the first dot generator **34**. Thus, one of the dots will disappear indicating a hit. The operation of the target gun circuits will be described in greater detail with reference to FIG. **4**.

The power source **41** is preferably a battern and provides the necessary power to operate the various circuits.

Referring now to FIG. **5**, there is illustrated thereby schematics of the blocks of FIG. **3**. The schematics are described in conjunction with the waveforms of FIG. **6**. Note that the circled capital letters A, B . . . designate connection points, that is A is coupled to A, B to B, etc. The horizontal oscillator **31** of FIG. **5A** is an astable

multivibrator that operates at approximately 15.75 KHz and generates the horizontal sync and timing pulses that are used within the control unit and the television receiver. One output signal taken at point **81** is a positive sync pulse which in one embodiment is approximately 8 volts in amplitude and has a pulse width of 4 microseconds. A second output signal taken at point **82** is a negative sync pulse which also is approximately 8 volts in amplitude and has a pulse width of 4 microseconds.

The vertical oscillator **32** of FIG. **5B** is an astable multivibrator that operates at 60 Hz and provides positive **89** and negative **90** vertical sync pulses of approximately 8 volts amplitude and 1 millisecond duration.

The first "dot" generator **34** is illustrated in FIG. **5C** and is comprised of an "and" gate, and horizontal and vertical delay and pulse-forming circuits. The delayed horizontal and vertical pulses (positive sync pulses) are AND-gated together to form the video information which produces one "dot" on the television screen. Both delay and pulse-forming circuits utilize the positive sync pulse transistor of their respective oscillators as its input transistor. The positive sync pulse from point **81** of the horizontal oscillator is used to trigger the horizontal delay and pulse-forming circuits portion of the first dot generator. When the positive sync pulse, taken at point **81**, is applied at point **84**, the pulse that appears at the output of the delay and pulse-forming circuit point **85** is delayed by the time constant established by the setting of potentiometer **86** and capacitor **87**. The delay and pulse-forming circuit output passes through a pulse shaper having an R-C time constant of very short duration relative to the horizontal oscillator frequency. The output of the pulse shaper is taken at a point **150**. The time delay may be varied from 9 microseconds to 57 microseconds which is substantially the entire range of the horizontal sweep period. The pulses which are generated by the horizontal oscillator, the horizontal delay and pulse-forming circuit and the pulse shaper, are shown in FIG. **6A** as waveforms **60, 61, 62** and **63**. Waveform **60** represents the negative horizontal sync pulses taken at point **82**; waveform **61** represents the positive horizontal sync pulses taken at point **81**; waveform **62** represents the output from the delay and pulse-forming circuit taken at point **85** and waveform **63** represents the output from the pulse shaper taken at point **150**.

The positive sync pulse taken at point **89** of vertical oscillator **32** is used to trigger the vertical delay and pulse-forming circuit portion of the first dot generator. The output signal appears at point **91** after a time delay which is determined by the setting of potentiometer **92** and capacitor **93**. The delay and pulse-forming circuit output passes through a pulse shaper having an R-C time constant of very short duration relative to the vertical oscillator frequency. The output of the pulse shaper is taken at point **151**. The time delay may be varied from 1.5 milliseconds to 15.5 milliseconds which is substantially the entire range of the vertical sweep period. The pulses which are generated by the vertical oscillator, the vertical delay and pulse-forming circuit, and the pulse shaper are shown in FIG. **6B** as waveforms **64, 65, 66,** and **67**. Waveform **64** represents the negative vertical sync pulses taken at point **90**; waveform **65** represents the positive vertical sync pulses taken at point **89**; waveform **66** represents the output from the delay and pulse-forming circuit taken at point **91**; and waveform **67** represents the output from the pulse shaper taken at point **151**.

The video information that will be displayed on the television screen **18** as a "dot" **20** is the summation of the outputs of the horizontal and vertical delay and pulse-forming circuit. When the delayed vertical pulse is at point **151**, the delayed horizontal pulses at point **150** will be gated through to the first "dot" generator output **94**. The waveforms of FIG. **6C** illustrate the signals **63** and **67** taken at points **150** and **151** respectively in expanded form and the output signal from the first "dot" generator **68** taken at point **94**. The signal **68** which is present at the first "dot" generator output **94** contains the horizontal and vertical data that will be processed by the television receiver and displayed as a "dot" $\mathbf{20_1}$ on the screen.

The settings of potentiometers **86** and **92** control the horizontal and vertical position of the "dot" $\mathbf{20_1}$ on screen **18**.

The second "dot" generator **35** (see FIG. **5D**) is configured exactly as the first "dot" generator and operates in the same manner to provide video information for the second "dot" $\mathbf{20_2}$. The input to the horizontal delay and pulse-forming circuit portion of the second "dot" generator is provided at a point **96**. The input to the vertical delay and pulse-forming circuit portion of the "dot" generator is provided at a point **97**. The output of the second "dot" generator is taken at a point **98**.

The "dot" coincidence and crowbar circuit **40** illustrated in FIg. **5E** is connected to the outputs of the first and second "dot" generators. The cathode end of a diode **101** is connected to the output **94** of the first "dot" generator while the cathode end of a diode **102** is connected to the output **98** of the second "dot" generator. When the outputs of both "dot" generators coincide, a positive signal will be applied to the gate **103** of a silicon controlled rectifier (SCR) **104**. The cathode of SCR **104** is tied to ground, while the anode thereof is connected at a point **106** to point **105** in the first "dot" generator. The SCR **104** will turn on and clamp point **105** of the first "dot" generator to ground. Thus, the output of the first "dot" generator will become zero as long as SCR **104** is conducting, causing the first "dot" on the television screen to disappear. After the "dots" are made non-coincident, the SCR **104** may be reset by momentarily depressing reset switch **26**, which removes the ground from point **105** of the first "dot" generator, allowing the first "dot" to reappear on the television screen.

The modulator and r-f oscillator illustrated schematically in FIG. **5F** is coupled by a resistive network comprising resistive element **108-111** (see FIGS. **5A–5D**) to the negative sync pulses of the horizontal and vertical oscillators and the output signals of the first and second "dot" generators. The r-f oscillator which operates at the selected television channel carrier frequency is collector-modulated by the output of the summing amplifier taken at point **112**. The composite video signal which is inductively coupled to pickup coil **113** is coupled to the television receiver antenna terminals **19**. The composite video signal is shown in FIG. **6D**.

The chroma generator **33** illustrated in FIG. **5G** is used only when the control unit **14** is coupled to a color television receiver and is comprised of a crystal-controlled oscillator, a variable phase shifter and an OR gate. The output of the crystal-controlled oscillator which operates at 3.579545 MHz is taken at point **115**. The phase shifter is variable over the approximate range of 0°– 180° by a potentiometer **116**. The reference phase signal (0°) **70** is coupled to point **117**. The variable phase signal **71** is coupled to point **118**. These signals are shown in FIG. **6E** and are displaced with respect to one another by the amount set in the phase shifter by potentiometer **116**. The output signal of the chroma generator developed at point **119** is comprised of a chroma sync burst and the chroma signal. The composite chroma signal **72** which is the output of the chroma generator is shown in FIG. **6F**. The chroma sync burst is the 0° phase reference signal. The chroma signal is the variable phase signal whose phase is compared by the television receiver against the chroma sync burst. The phase difference between the two signals determines the color to be displayed on the screen. The positive sync pulse from point **81** of the horizontal oscillator is used to gate 0° phase reference signal to point **119**. The trailing edge of the positive going pulse at point **120** gates approximately 3–5 microseconds of the 0° phase referenced to point **119** to become the chroma sync burst. The composite color information is summed to the modulator input **114** by capacitor **121**. The total composite video signal including the color information is then modulated, as explained before for the monochrome signal, with the carrier and coupled to the television antenna terminals **19**.

Alternately the video and/or chroma signals may be applied to the crowbar modulator **126** of FIG. **8**. (This will be described hereinafter).

When the gaming system is being used in either the target gun or "dot" coincident mode with a color TV receiver, the background color will change when the "-dot" disappears from the television screen. The anode of SCR **104** of the coincidence detector and crowbar circuit **40** which is connected to point **105** of the first "-dot" generator to make the "dot" disappear is also connected to point **122** of the chroma generator. When the chroma generator is adjusted for a red background, the background will change to blue when point **122** is clamped to ground by SCR **104**. The SCR **104** will be fired either by coincidence of the "dots" or by alignment of the photo cell in the target gun with the target "dot".

Turning now to FIG. **4**, the target gun circuits **36** are shown schematically. When the target gun is pointed at the target "dot" on the television screen, a photocell **50** mounted at the end of the target gun barrel will detect the intensity modulated "dot." The detected signal is amplified by transistors **51** and **52**. When the gun trigger switch **53** is closed, the amplified detected signal is applied to the gate electrode of a silicon controlled rectifier (SCR) **104**, which will file SCR **104**. The SCR **104** now clamps the output of the "dot" generator **34** to ground and the "dot" 20_1 will disappear. Whether the first or the second "dot" is used as a target does not matter, since a hit will be indicated by the disappearance of the first "dot". If only one "dot" is to be displayed on the screen as a target, the first "-dot" would be used. A reset button **26** is provided to make the target reappear after a hit has been scored. The portion of the circuit appearing within the dashed lines **56** is part of the "dot" coincidence and crowbar circuit **40**.

An adjustment is provided by means of potentiometer **57** whereby the threshold level of photo cell **50** may be adjusted such that only when the gun is properly aligned with the target will the "dot" disappear. This procedure assures that false hits due to stray or scattered light from the room will not be scored. The setting should be made so that SCR **104** will now be triggered by the brightness of the room but only the intensity of the displayed "dot."

As previously mentioned, this invention may be employed in conjunction with information originating from a cooperative station such as a commercial TV, a closed-circuit TV or a CATV station. In these embodiments means are necessary for extracting the horizontal and vertical synchronization pulses from the TV receiver which is receiving a signal from a cooperative station. The horizontal and vertical synchronization pulses could be obtained from within the TV receiver directly. However, this necessitates making electrical connections to the internal circuitry of the TV receiver. Preferably, the apparatus illustrated in FIG. **7** is used to derive the synchronization pulses.

A device **129** is positioned in front of the receiver and attached to it by, for example, a suction cup at approximately the center bottom edge of the CRT glass face (see FIG. 1D). Device **129** contains both a photocell **128** and a pickup coil **123** responding broadly to 15,570 Hz. These devices pick up a 60 cycle signal component provided by a white stripe at the bottom of the CRT, (generated by the cooperative station) and a radiated 15,570 horizontal scan signal, respectively. These signals are applied via a cable **130** to a pair of amplifiers **127** (vertical) and **124** (horizontal) and fed to a pair of pulse shapers **125** (vertical) and 125_1 (horizontal). This yields synchronization pulses which duplicate in rate and phase those transmitted. Applying these pulses to points **82** and **90** in FIGS. **5A** and **5B** allows locking the horizontal and vertical oscillators into sync with the transmitted signals. Consequently, all of the functions previously described, such as the generation of "dots" for checker type games, target shooting, chase games and all other functions available to control by the "viewer," may now be overlaid the transmitted TV picture. Modulation in this mode of operation is accomplished by the "crowbar" modulation circuit **126** of FIG. **8**.

In this Figure, use is made of an attenuator consisting of two series resistors **132** and **133** and a transistor **134** acting as a variable shunt resistor. Biasing this transistor sufficiently into conduction by applying modulation to its base, saturates the transistor, momentarily reducing the RF signal going from the antenna to the TV receiver antenna terminals **19**. This corresponds to carrier reduction, which is negative modulation and is equivalent to generating a video signal going from black to white and back to the black level. Chroma signals can also be applied to the crowbar transistor modulator in the same fashion.

Note that the combination of apparatus described in FIGS. 7 and 8 describe a mode of interacting with a transmitted TV signal without requiring the attachment of connections to the internal circuitry of the TV receiver.

As mentioned above, the invention may be employed in conjunction with a cooperative TV station such as commercial TV, closed-circuit TV and CATV (community antenna television). In this mode the invention may be employed for target shooting or for decoding messages on a TV screen, such messages being the result of transmission from the cooperative station, as for example testing with coded answer supplied. Other transmissions can be transmissions from organizations offering services to the equipped viewer where the services offered may be typically Consumer Products Buying Recommendations, Stock "Buy-Sell-Hold" recommendations and others involving the presentation of valuable information available to the viewer equipped in accordance with this invention.

In FIG. 10 there is illustrated a combination target shooting and decoding apparatus. The decoding portion thereof is described in connection with the sketch of FIG. 9. Although the circuit shown is used for both decoding and target shooting it will be obvious that certain of the components can be eliminated to provide either of the functions alone.

The information is presented on the TV screen in such a manner that a portion thereof is coded. For example, FIG. 9 illustrates using the presentation for testing. The question and a group of possible answers is presented on TV screen 18 as illustrated with symbols 152–155 shown next to each answer. One of the symbols (in the example shown 153) is coded in such a manner that it will trigger the decoder of FIG. 10. For example, symbols 152, 154 and 155 may flash 60 times whereas the correct answer symbol 153, will flash 61 times. The decoder of FIG. 10 is arranged to respond to the odd number of flashes.

The electronics of FIG. 10 can be inserted into a "-gun" or other suitable configuration and therefore be easily handled.

Referring now to FIG. 10, initially pressing a reset switch 142 sets the equipment. Reset switch 142 is a double pole single throw switch. The modulation from the coded symbol incident at a photocell 136 is supplied via a buffer amplifier 137, and an amplifier and pulse shaper 138 to a flip-flop 139 which is triggered. The output from flip 139 is applied via a buffer amplifier 141 to a lamp 140 which will light with a steady glow until reset indicating the correct answer was chosen.

If an incorrect answer was chosen, the lamp will flicker for a time equal to the time the symbol (152, 154, 155) is being modulated and then will go out.

To go to the next question, the decoder is returned to its starting position by operating reset switch 142. Note: initially reset switch had to be depressed so that the flip-flop would be in the proper state to provide a steady output to the lamp when photocell 139 receives an odd number of cycles.

To operate the circuit of FIG. 10 in its target shooting mode, a switch 145 is switched to the alternate contacts 146, 147.

In this mode, (see FIG. 1C) a "target" dot 148 is supplied by the cooperative station which also could supply background scenery for asthetic purposes. When the "gun" 27 (FIG. 1C) is aimed at the target 148 and the trigger (switch 144 FIG. 10) is depressed, photocell 136 will supply an output via buffer amplifier 137 and buffer amplifier and pulse shaper 138 to the gate electrode of a silicon controlled rectifier 149 which causes SCR 149 to fire and light lamp 140. Switch 142 also resets SCR 149 turning off lamp 140.

FIG. 1E illustrates an alternate embodiment to that described above. The output from the target shooter is applied to a crowbar circuit 24 the output of which is applied to antenna terminals 19 such that the screen 18 will also flash white when a "hit" is made.

The principles hereinabove set forth apply with equal strength to both monochrome and color applications. While the system that has been described has been basically for monochrome television sets, the provisions for color operation have been described and may be applied to games utilizing the aspects of the ability to adjust or change the background color. Thus, it can be seen that a game such as roulette may be played having for its object the guessing of the color that will appear when the wheel stops spinning. Very readily the system can be used to indicate a hit in the target game both by the disappearance of the square and by the change in background color. These are but a few of the countless variations that may be applied to this concept.

The number and variations of games which may be played are limited only by the imagination of the players. Some of the games which may be played are overlay games, target shooting games, chase games and color games.

FIG. 2 illustrates one type of overlay games, namely a modified checkerboard game. One player tries to move his "dot" 20_1 from A to B while the other player tries to move his "dot" 20_2 from B to A. The "dots" may be moved orthonogally only and only one square at a time. It is one object of this game to avoid checkmate. Other overlay games will be readily apparent.

Another type game is a chase game. For example, a fox hunt can be simulated. This requires 3 players, a hunter, a fox and a score keeper. The hunter tries to catch the fox (indicated by the fox's "dot" disappearing within a specified time. Numerous variations on this game are also possible with and without overlay patterns.

If the receiver employed is a color receiver then color games may be played. For example, an inertia wheel may be put on the shaft of potentiometer 116 in the chroma generator. The object of the game is for a player to guess the color which will appear when the wheel is spun.

The target shooting game is yet another game which is applicable to this invention. One player may manually move a "dot" while another tries to "hit" the "dot" with the photocell gun. Alternatively, the target may be automatically moved by, for example, driving the biasing voltage for the delay and pulse-forming circuit in a "dot" generator with a variable voltage source.

It should also be understood that the principles are not to be limited only to the gaming aspects but may be applied in the areas of scientific, educational, clinical and other applications. Hence, it is to be understood

that the embodiments shown are to be regarded as illustrative only, and that many variations and modifications may be made without departing from the principles of the invention herein disclosed and defined by the appended claims.

I claim:

1. In combination with a standard television receiver, apparatus for generating "dots" upon the screen of the receiver to be manipulated by a participant, comprising:

a control unit for generating signals representing the "dots" to be displayed, said control unit further including means for generating synchronizing signal to synchronize the television raster scan of said receiver and means for manipulating the position of the "dots" on the screen of said receiver; and

means for directly coupling the generated signals only to said television receiver whereby said "dots" are displayed only upon the screen of said receiver being viewed by the participant.

2. The combination of claim 1 wherein said control unit includes:

a horizontal sync generator;

a vertical sync generator;

at least one dot generator coupled to said horizontal and vertical sync generators;

means for generating an rf signal; and

means for modulating said rf signal with an output signal from said dot generator, said modulated rf signal being coupled to said television receiver.

3. The combination of claim 2 wherein said horizontal sync generator includes an astable multivibrator and said vertical sync generator includes as astable multivibrator.

4. The combination of claim 2 wherein said "dot" generator includes horizontal and vertical delays and an AND gate coupling the outputs from said delays.

5. The combination of claim 2 wherein said means for generating a modulated rf signal includes:

means for summing the signal outputs from said horizontal sync generator, said vertical sync generator and said dot generator to provide a video signal; and

means for modulating the video signal with a carrier signal the frequency of which is selected in accordance with which channel of the television receiver the "dots" are to be displayed.

6. The combination of claim 2 wherein said dot generator includes means for varying the position of the generated "dots" on the television receiver screen.

7. The combination of claim 2 wherein said control unit includes first and second dot generators coupled to said vertical sync generator and said horizontal sync generator.

8. The combination of claim 7 wherein said means for generating a modulated rf signal includes:

means for summing the signal outputs from said horizontal sync generator, said vertical sync generator and said first and second dot generators to provide a video signal; and

means for modulating the video signal with a carrier signal the frequency of which is selected in accordance with which channel of the television receives the "dots" are to be displayed.

9. The combination of claim 8 wherein each of said dot generators includes means for varying the position of the generated "dots" on the television receiver screen.

10. The combination of claim 9 wherein said position varying means includes a control for varying the vertical position of each generated "dot" and a control for varying the horizontal position of each generated "dot".

11. The combination of claim 9 wherein said position varying means includes one control for varying the horizontal and vertical position of each generated "dot."

12. The combination of claim 11, said control being a joystick.

13. The combination of claim 9, further including means for denoting coincidence when a "dot" generated by one of said dot generators is located in the same position on the television screen as a "dot" generated by another of said dot generators.

14. The combination of claim 13 wherein said coincidence denoting means includes a coincidence detector and crowbar circuit coupled to said first and second dot generators such that coincidence of position of said "dots" will be indicated by having said first dot generator turned off causing disappearance on the screen of the television receiver of its respective "dot."

15. The combination of claim 14 wherein said coincidence detector and crowbar circuit includes a semiconductor switch and means for turning on said switch when a signal is received simultaneously from said first and second dot generators.

16. The combination of claim 14, further including means for resetting said coincidence denoting means after the "dots" are made noncoincident.

17. The combination of claim 14, further including means operatively responsive to a displayed "dot."

18. The combination of claim 17, wherein said means responsive includes:

means for sensing light; and

means for actuating said coincidence denoting means when said light sensing means detects a "dot" displayed on the television receiver screen.

19. The combination of claim 18 wherein said actuating means includes a switch which couples the output from said light sensing means to said coincidence denoting means.

20. The combination of claim 19 wherein said light sensing means is a photosensitive element arranged within the barrel of a toy gun.

21. The combination of claim 14 in which said television receiver is a color receiver, said combination further including a chroma generator having inputs from said horizontal sync generator and said coincidence denoting means and an output to said signal summing means, such that coincidence will also be indicated by a changing of background color of said television receiver screen.

22. The combination of claim 21 wherein said chroma generator includes a control for varying the background color of the television receiver screen.

23. The combination of claim 22 further including a wheel coupled to said control for varying background color which when spun will cause the background color to be of non-predetermined selection.

24. The combination of claim 1, further including an overlay mask attached to the television receiver screen, said overlay mask having a predetermined pattern thereon.

25. The combination of claim 1, further including means for automatically moving said "dots" about said television screen.

26. The combination of claim 25, further including means for "shooting" at said moving "dots", said "shooting" means including light responsive means responsive to a displayed "dot".

27. The combination of claim 1, further including means for "shooting" at said "dots," said "shooting" means including light responsive means responsive to a displayed "dot" when aligned therewith.

28. Television gaming apparatus as defined in claim 27, further including means for causing one of said "-dots" to disappear when said "shooting" means receives light from a displayed "dot".

29. Television gaming apparatus as defined in claim 27 in which said television receiver is a color receiver, further including means for causing the background color of said television screen to change color when a "hit" is made.

30. The combination of claim 27 wherein said light responsive means includes a photocell.

31. The combination of claim 1, further including means for receiving background information generated on the television receiver screen by a cooperative television station.

32. In combination with a standard television receiver including horizontal and vertical deflection circuitry which is synchronized with horizontal and vertical synchronization signals, apparatus for generating "dots" upon the screen of the receiver to be manipulated by a participant, comprising:

a control unit responsive to the horizontal and vertical synchronization signals for generating signals representing "dots" to be displayed, including means for manipulating the position of the "dots" on the screen of the receiver; and

means for directly coupling the generated signals only to said television receiver whereby said "-dots" are displayed only upon the screen of said receiver being viewed by the participant.

33. The combination of claim 32, further including:

means for receiving information generated by a cooperative television station; and

means for applying the received information to said television receiver to be displayed thereby.

34. The combination of claim 33 wherein said applying means includes means for modulating said received information by said generated signals.

35. The combination of claim 34 wherein said modulating means includes means for momentarily causing a reduction of signal strength of said received information when generated signals are being applied, whereby the generated "dots" are displayed at their particular position of the screen in place of the received information.

36. The combination of claim 33, further including means synchronizing the generated signals with the received information.

37. The combination of claim 36 wherein said synchronizing means includes:

means for receiving a horizontal scan signal generated by the television station; and

means for detecting a vertical synchronizing component provided on the screen of the television receiver.

38. The combination of claim 37 wherein said means for receiving a horizontal scan signal includes a pickup coil and said means for detecting a vertical synchronizing component includes a photocell.

39. The combination of claim 36 wherein said synchronizing means is mechanically coupled to the television screen.

40. Apparatus for generating "dots" upon the screen of a television receiver to be manipulated by a participant, comprising:

a control unit for generating signals representing the "dots" to be displayed, said control unit further including means for generating synchronizing signals to synchronize a television raster scan of a receiver and means for manipulating the position of the "-dots" on the screen; and

means for directly coupling the generated signals only to a single television receiver whereby said "-dots" are displayed only upon the screen of the single receiver being viewed by the participant.

41. Apparatus as in claim 40, further including means for "shooting" at said "dots," said means including light responsive means responsive to a displayed "-dot."

42. The combination of claim 1 wherein said control unit includes

means for providing horizontal sync signals;

means for providing vertical sync signals;

a first RC network coupled to said means for providing horizontal sync signals;

a second RC network coupled to said means for providing vertical sync signals;

a first transistor coupled to said first RC network;

a second transistor coupled to said second RC network;

first pulse shaping means coupled to the output of said first transistor;

second pulse shaping means coupled to the output of said second transistor; and

an AND gate coupled to said first and second pulse shaping means.

43. The combination of claim 1 wherein at least two "dots" are displayed on the screen of said receiver.

44. Apparatus for use within a television receiver, which receiver includes horizontal and vertical deflection circuitry which is synchronized with horizontal and vertical synchronizing signals, said apparatus including means for generating "dots" upon the screen of said receiver to be manipulated by a participant, comprising:

a control unit responsive to the horizontal and vertical synchronizing signals for generating signals representing "dots" to be displayed, including means for manipulating the position of the "dots" on the screen of said receiver whereby said "dots" are displayed only upon the screen of said receiver.

45. Apparatus as in claim 44 wherein said horizontal and vertical synchronization signals are received from a television station.

46. Apparatus as in claim **45** wherein said received synchronization signals are the standard synchronization signals generated by the television station.

* * * * *